PLANMECA

Planmeca Viso™

EN

technical manual

30005968

Table of contents

The manufacturer, assembler and importer are responsible for the safety, reliability and performance of the unit only if:

- installation, calibration, modification and repairs are carried out by qualified authorised personnel
- electrical installations are carried out according to the appropriate requirements such as IEC 60364
- equipment is used according to the operating instructions.

Planmeca pursues a policy of continual product development. Although every effort is made to produce up-to-date product documentation this publication should not be regarded as an infallible guide to current specifications. We reserve the right to make changes without prior notice.

Publication number 30005968 Revision 3

Released 29 June 2018

1 General and technical data

1.1 Introduction

The Planmeca Viso X-ray unit uses Cone Beam Computed Tomography (CBCT) to produce three-dimensional (3D) X-ray images. Panoramic, cephalometric and projection radiography techniques can be used for two-dimensional (2D) X-rays.

This manual describes how to maintain and service the Planmeca Viso X-ray unit. These instructions include options that may not be available in all countries.

1.1.1 Manual versions

Planmeca pursues a policy of continual product development. Although every effort is made to produce up-to-date product documentation this publication should not be regarded as an infallible guide to current specifications. We reserve the right to make changes without prior notice.

NOTE

This manual is valid for Viso software version 1.1.0 or later.

NOTE

This software version is compatible with Planmeca Romexis software version 5.1.1 or later. To check the software version of your X-ray unit, select Settings > About > Component Information > SW version.

The installed software revision determines the available functions and behaviour of the unit. If the unit is reporting error or help messages not listed in this manual, please refer to a newer revision of the manual.

1.1.2 Associated documentation

The X-ray unit is supplied with the following manuals:

- User's manual
- Installation manual
- Installation quick guide
- Technical manual

These manuals are intended to be used in conjunction with the documentation for the Planmeca Romexis program. The Romexis package contains the following manuals:

- User's manual
- Technical manual

NOTE

Outside of the information in these documents, Planmeca provides additional instructions and descriptions to assist the service personnel in parts repair.

Training

A hands-on user's training is given in connection with the X-ray unit installation, adjusting, service and maintenance.

1.2 Warnings and cautions

WARNING

THE FOLLOWING WARNINGS, CAUTIONS AND NOTES MUST ALWAYS BE CONSIDERED WHILE SERVICING THE UNIT, IN ORDER TO AVOID EITHER PERSONAL INJURY OR DAMAGE TO THE UNIT.

WARNING

In the ME containing batteries shall include warning notice and marking as specified etc. housing, connection (Polarity) , type, overcharging, marking (lithium) and current/voltage protection.

WARNING

Avoid the risk of electric shock by only connecting this equipment to a supply mains with protective earth.

WARNING

ELECTRICAL SAFETY RULES

The unit contains hazardous voltages. While servicing internal parts, the power supply must be disconnected externally from, for example, a fuse or a mains switch. The fuse or main switch must be lockable into off-position.

Turning off the unit from its own mains switch DOES NOT cut off the mains voltage from all internal nodes.

Wait for 2 minutes before touching any electrical parts.

WARNING

Do not modify the X-ray unit. The X-ray unit must be serviced by qualified personnel only, with authorisation from the manufacturer.

WARNING

RADIATION SAFETY RULES

Some procedures described in this manual produce X-ray radiation. Always follow the rules for radiation protection.

Never attempt to open the tube head. It does not contain any serviceable parts, and radiation safety can no longer be guaranteed.

Never make any exposures without the filter or the beam limiting device (collimator) in place. Otherwise the radiation safety cannot be guaranteed.

WARNING

ELECTRICAL SAFETY RULES

The unit contains hazardous voltages. While servicing internal parts, the power supply must be disconnected externally from, for example, a fuse or a mains switch. The fuse or main switch must be lockable into off-position.

Turning off the unit from its own mains switch DOES NOT cut off the mains voltage from all internal nodes.

Wait for 2 minutes before touching any electrical parts.

CAUTION

Use protective eye-wear when changing the battery.

CAUTION

The maximum temperature of the tube head is limited to 60° C (140° F). The rubber bellows inside the tube head keep the pressure constant within the allowed temperature range.

CAUTION

EMC requirements have to be considered, and the equipment must be installed and put into service according to the specific EMC information provided in section "EMC information" on page 27.

CAUTION

Portable and mobile RF communications equipment can affect the X-ray unit. For minimum distance between portable and mobile RF communications equipment and the X-ray unit, see section "EMC information" on page 27.

CAUTION

ELECTRICAL SAFETY RULES

Always replace the fuses with ones of the same type and rating. Otherwise patient, operator or equipment safety cannot be guaranteed.

The circuit boards can be damaged due to static discharges and requires careful handling.

CAUTION

GENERAL SAFETY RULES

The unit must be serviced only by qualified personnel, trained by PLANMECA. Repairs and parts replaced by unqualified personnel carry no warranty.

Periodical maintenance as described in this manual must be performed on a regular basis, to ensure the safety and image quality of the unit.

Some procedures described in the unit could be dangerous, if not followed as stated.

NOTE

The display values shown in this manual are only examples and should not be interpreted as recommended values unless otherwise stated.

1.3 Symbols on product labels

CE 0598 — Fulfils the requirements of Directive 93/42/EEC.

SGS C US — SGS listing marking according to US and Canadian standards (ANSI/AAMI ES60601-1 and CAN/CSA C22.2 No. 60601- 1).

Date of manufacture (Standard ISO 7000).

Type B applied part (Standard IEC 60417).

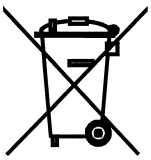

Separate collection for electrical and electronic equipment according to Directive 2002/96/EC (WEEE).

Refer to instruction manual/booklet (Standard ISO 7010).

Emergency stop (Standard IEC 60417)

Warning: Electricity (Standard ISO 7010).

To avoid risk of electric shock, this equipment must only be connected to a supply mains with protective earth.

Electrostatic sensitive device (Standard IEC 60417)

Warning, hot surface (Standard ISO 7010).

General warning (Standard ISO 7010).

1.4 Unit overview

The following picture shows the main features of the Planmeca Viso X-ray unit.

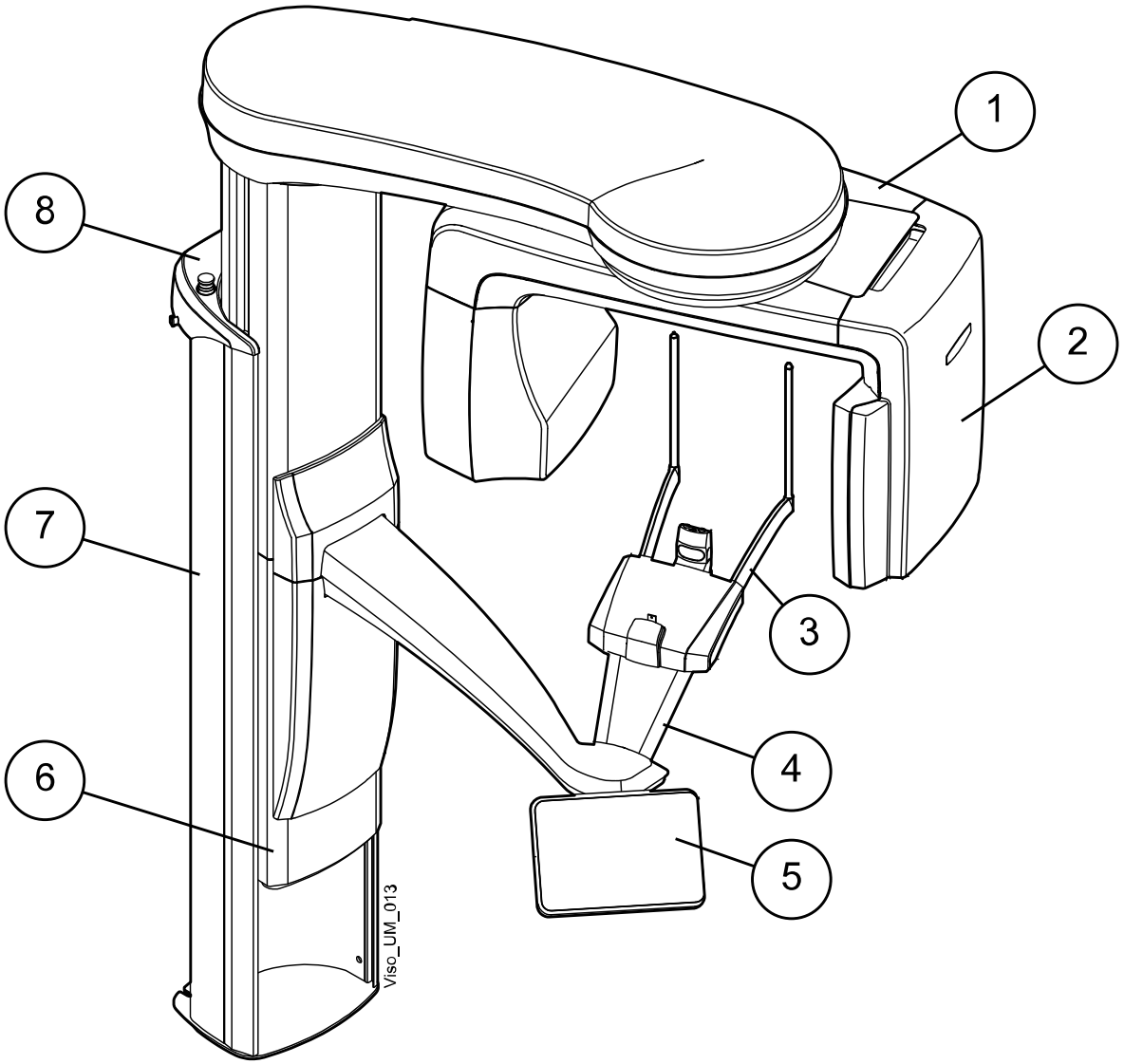

1. C-arm	2. Sensor	3. Patient support
4. Patient handles	5. Touch screen	6. Moving column
7. Stationary column	8. Emergency stop button	

1.4.1 On/off switch

The on / off switch is located on the underside of the stationary column top.

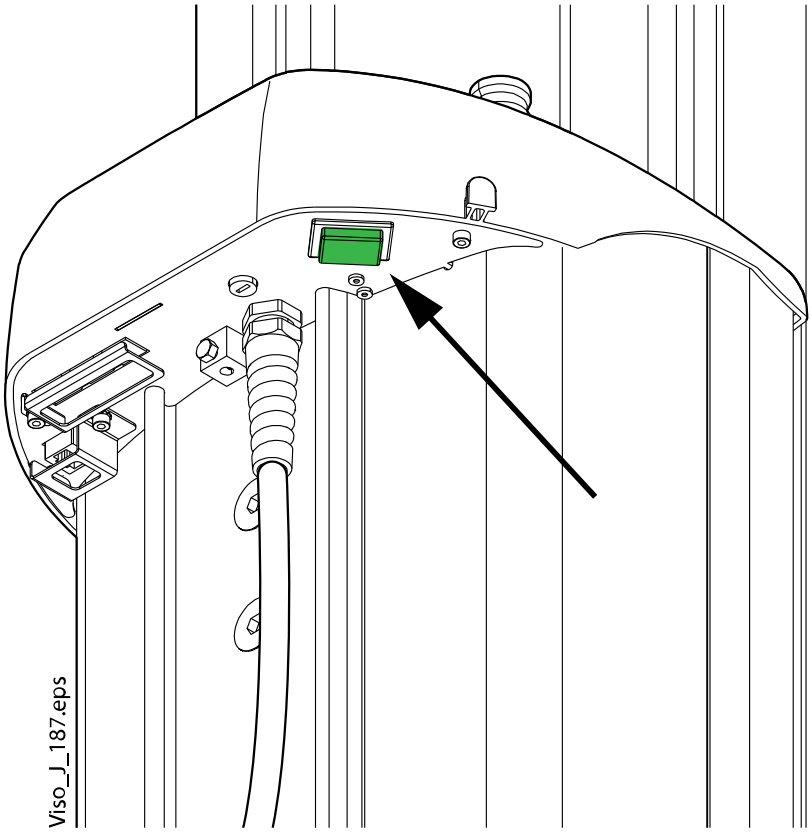

When you switch the X-ray unit on the main display will be shown on the control panel and the X-ray unit will carry out a self-test which takes approximately 75 seconds.

The X-ray unit is then ready for use.

NOTE

To prolong the lifetime of the Planmeca Viso X-ray unit, always switch off the X-ray unit when it is not in active use.

1.4.2 Touch screen

NOTE

Do not use sharp objects to operate the touch screen.

To return to the main view from another screen, select the home button at the top corner of the screen.

To make a selection on the touch screen, simply touch a button or a field with your finger or a soft stylus. The selected option will be highlighted. To deselect an option, touch the button or field again (or select an other option if available).

To accept a selection and to go to the next screen, touch the forward button.

To accept a selection and to skip the next screen, touch the fast forward button.

To accept a selection, touch the green check mark button.

To cancel a selection, touch the red cross button.

If you want to pause a function (instead of cancelling it) touch the pause button.

To scroll a list down or up, slide your finger on the screen.

To change a setting, select the service spanner at the top left corner of the main view. This will take you to the settings menu where you can adjust the settings of the X-ray unit.

1.4.2.1 Calibrating touch screen display

In case the touch screen is not working accurately, e.g. touching button on the screen activates task of the button next to it, or it is just hard to activate desired button or area on the screen, calibrate the display.

Normally, there is no need to calibrate the display at all, but the factory made calibration remains valid.

To calibrate the display, follow the steps below.

1. Switch on the X-ray unit.
2. As soon as the screen displays text **Touch the screen now to start calibration**, touch the screen. The calibration screen appears.
3. In the calibration screen, five calibration adjustment markers will appear on the display, one at a time:
   - 1st in the left up corner
   - 2nd in the right up corner
   - 3rd in the right bottom corner
   - 4th in the left bottom corner
   - 5th in the center of the display.
4. Touch the adjustment markers in the order they appear on the screen. After touching the final adjustment marker, the X-ray unit will start up normally.

1.4.3 Emergency button

The emergency stop button is located on the top of the stationary column.

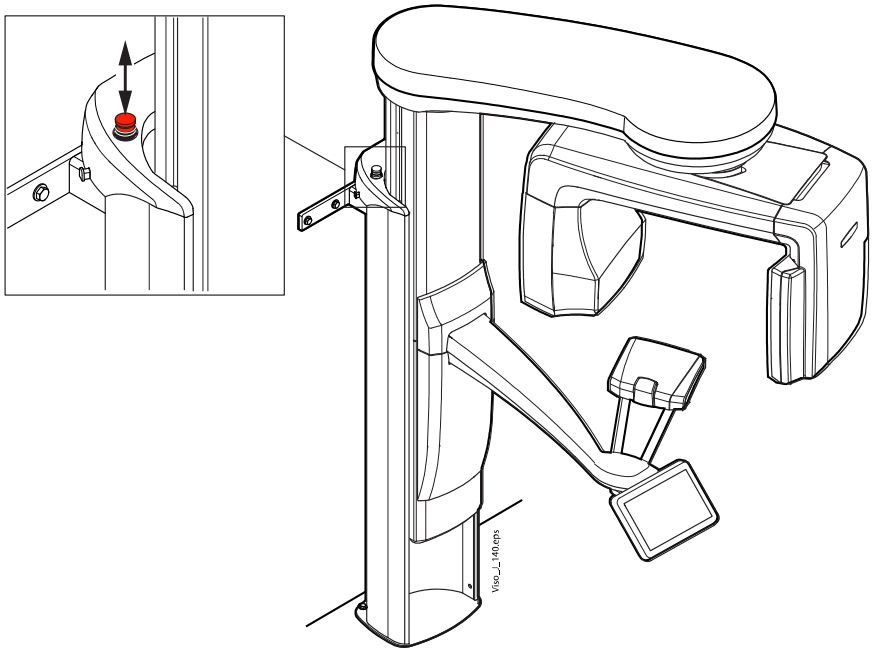

Press the emergency button to stop the X-ray unit operating in an emergency. When the emergency stop button is pressed down, all movements of the X-ray unit are blocked and the unit will not generate radiation. The up / down movement will stop within a distance of 10 mm (0.4 in.).

A help message will appear on the touch screen. Guide the patient away from the X-ray unit. Then release the emergency stop button. The X-ray unit will automatically restart.

1.4.4 Exposure switch

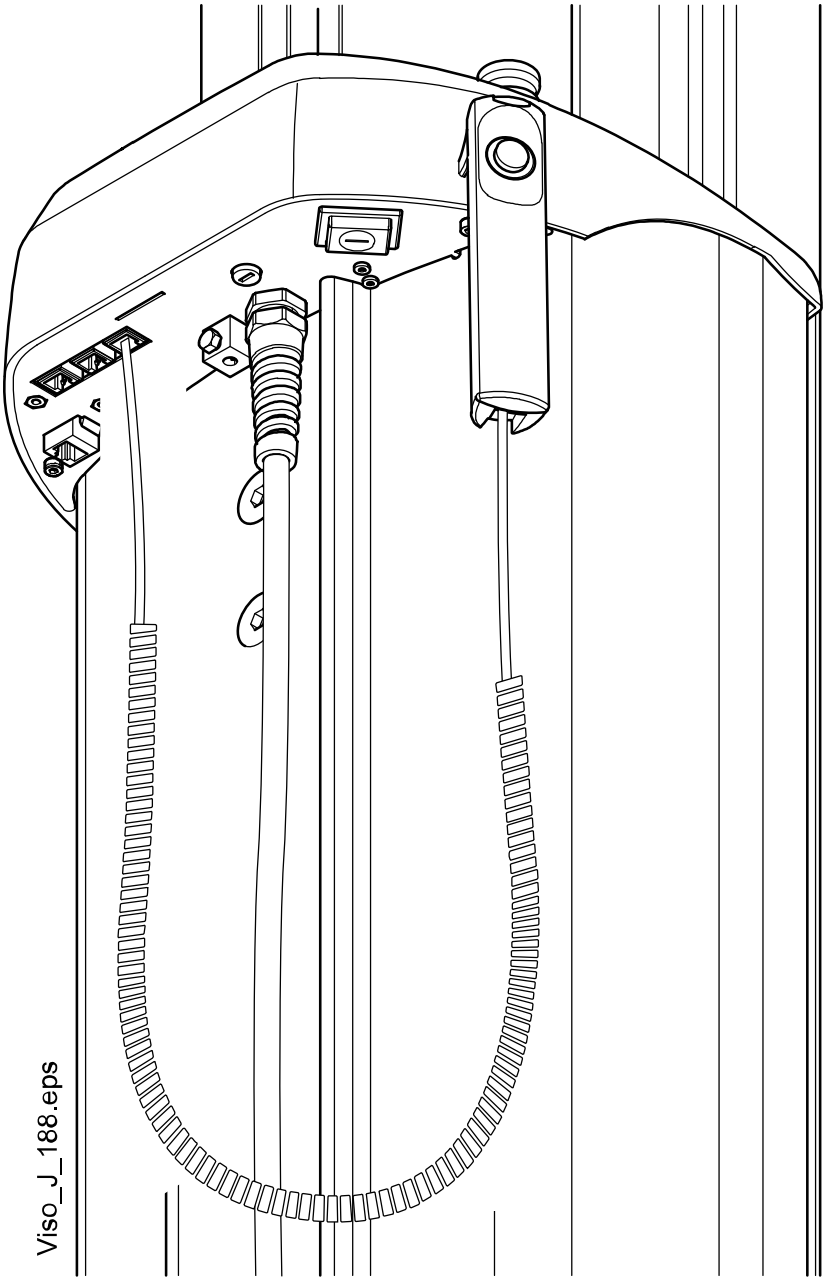

1.4.5 Space requirements

The following table lists the space requirements for the Planmeca Viso X-ray unit.

Unit dimensions (without cephalostat)	1385 (W) x 1560 (D) x 2390 (H) mm 54.5 (W) x 61.42 (D) x 94.1 (H) in.
Unit dimensions (with cephalostat)	2075 (W) x 1560 (D) x 2390 (H) mm 81.7 (W) x 61.42 (D) x 94.1 (H) in.
Minimum required space (without cephalostat)	1910 (W) x 1560 (D) x 1600 - 2400 (H) mm 75.2 (W) x 61.42 (D) x 63 (H) in.
Minimum required space (with cephalostat)	2385 (W) x 1560 (D) x 1600 - 2400 (H) mm 93.9 (W) x 61.42 (D) x 94.5 (H) in.

The following sections describe the X-ray unit dimensions and minimum space requirements in more detail.

1.4.5.1 Minimum required space

The following figures show the **recommended practical operational space** requirements for the Planmeca Viso X-ray unit.

Without cephalostat:

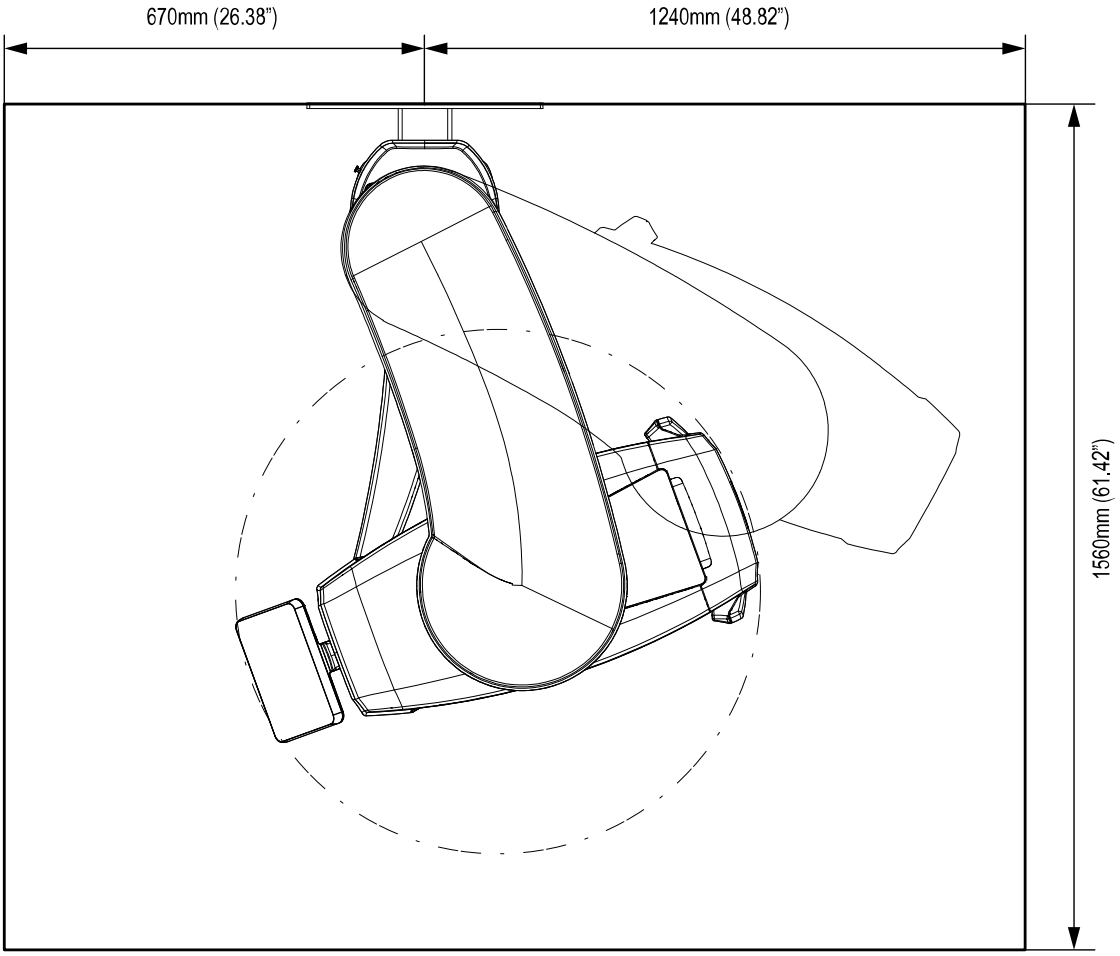

With cephalostat:

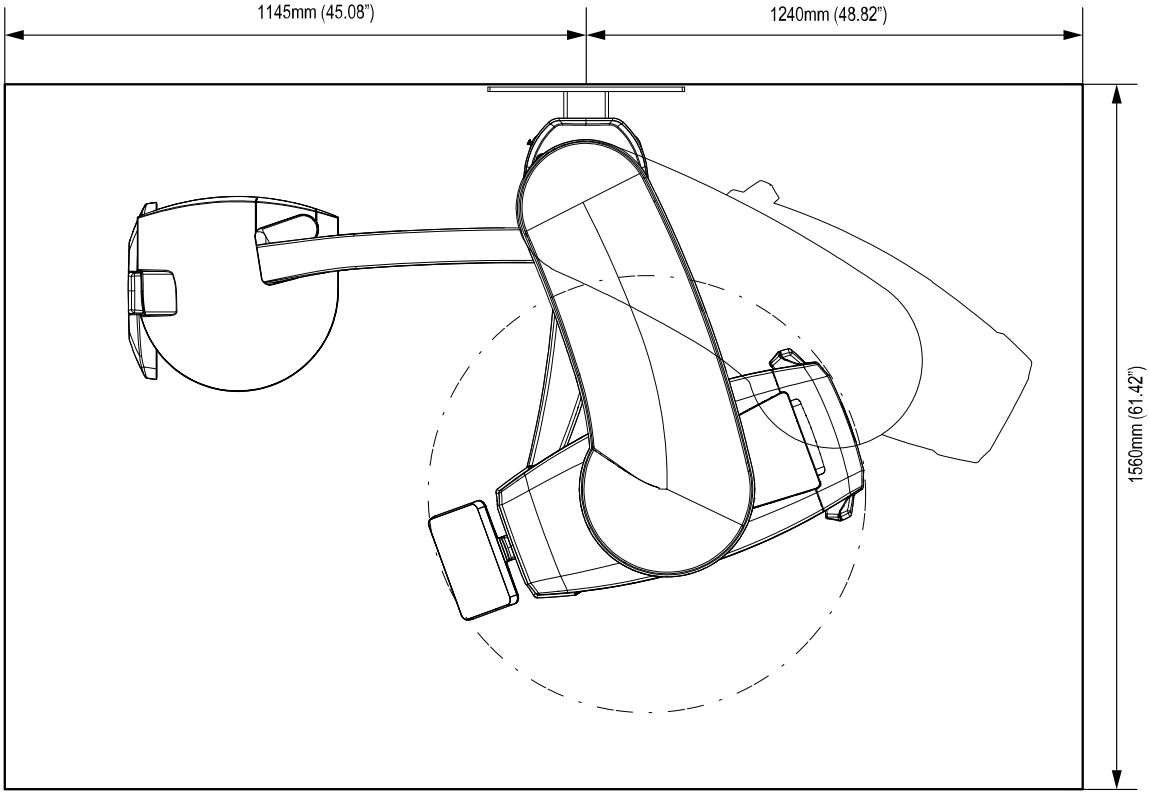

X-ray unit height:

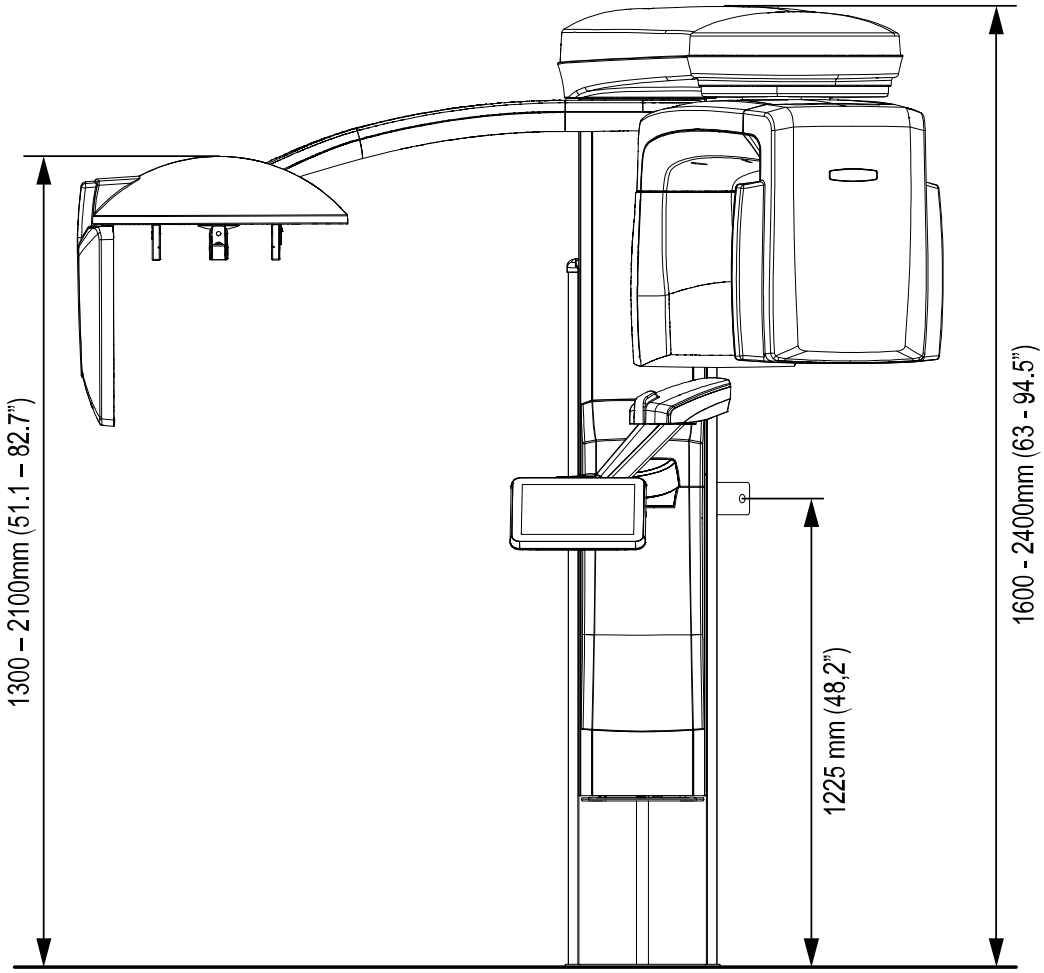

NOTE

The distances marked are distance added to the nominal installation and movement space requirements.

NOTE

The maximum height can be adjusted to suit clinics with low ceiling.

1.4.5.2 Support frame dimensions

If needed, e.g. because of narrow doors or stairs, the X-ray unit can be moved in its wooden support frame. In the following, the wooden support frame dimensions for different Planmeca Viso X-ray unit models are presented.

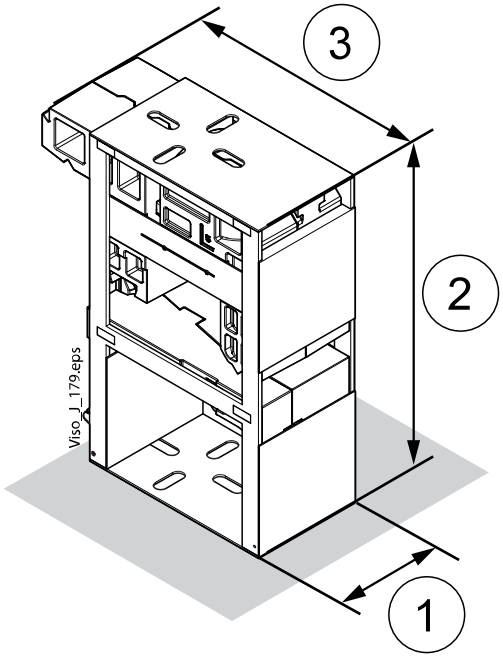

Width (1)	Height (2)	Depth (3)
620 mm 24.4”	1620 mm 63.8”	1020 mm 40.2”

1.4.6 Input connections

The following image shows the different inputs available on the underside of the fixed column top.

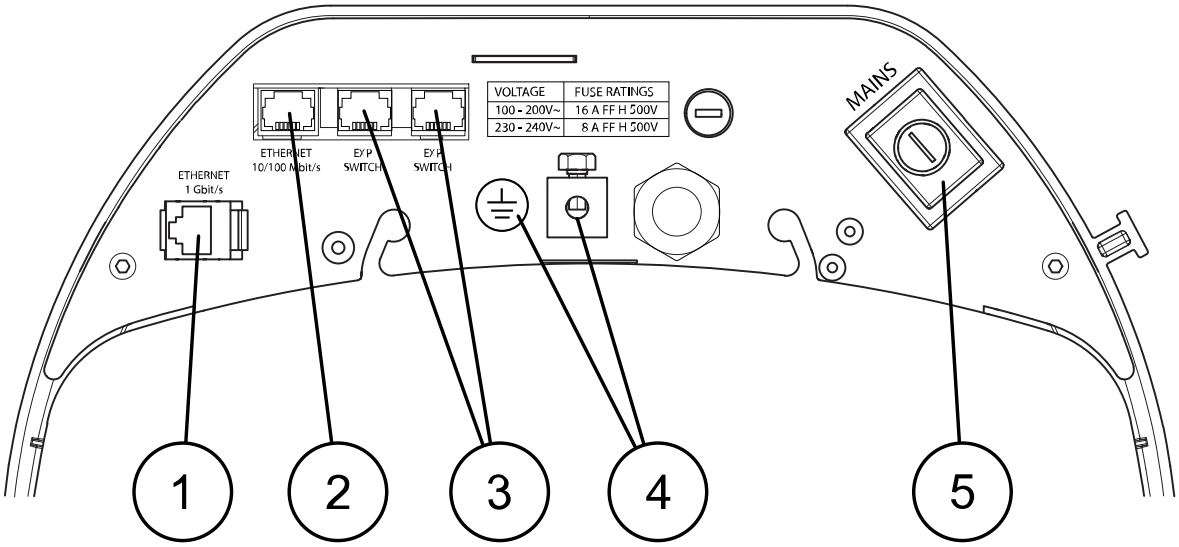

1. Viso Ethernet port (1 Gbit/s)	2. Additional Ethernet port (blocked) (10/100 Mbit/s)	3. Exposure switch ports
4. Protective earth grounding (with label)	5. Mains power (button)	

NOTE

If the grounding cable's cross-section is greater than 2.5 mm^2, use the connector (4 in the image above). Otherwise, connect the grounding cable as part of the main power installation.

1.5 Product labels

The following image shows the device plate for Planmeca Viso.

X-RAY UNIT	
Trademark: Planmeca Viso	
Type: G7	
SN :	
230 - 240 V ~ **50Hz**	
MAXIMUM APPARENT RESISTANCE OF SUPPLY MAINS **0.5 Ohm**	
CONTINUOUS OPERATION WITH INTERMITTENT LOADING **1800W Intermittent:13:100 (84kV 16mA exposure)** **150VA Continuous**	
Pan/ceph: 84 kV maximum, Total filtration 2.5 mm Al **3D: 120 kV maximum, Total filtration 2.5 mm Al + 0.2 mm / 0.5 mm Cu**	
LIFT MOTOR OPERATION: Intermittent operation, ED 8% **25 sec "ON", 400 sec "OFF"**	
Manufactured by: PLANMECA OY **Asentajankatu 6, 00880 Helsinki, FINLAND**	
CLASS 1 LASER PRODUCT APPAREIL À LASER DE CLASSE 1 IEC 60825-1:2007 CE 0598	LBL-30005536-C

The following image shows the X-ray tube assembly label.

X-RAY TUBE ASSEMBLY		
X-RAY TUBE ASSEMBLY TYPE: 120T001	**NOMINAL X-RAY TUBE VOLTAGE:** 120 kV	
X-RAY TUBE ASSEMBLY SN:		
X-RAY TUBE TYPE: D-059SBR		
X-RAY TUBE SN:		
0,5 (IEC 60336)		
PERMANENT FILTRATION: 2,5 mm Al (IEC 60522)		LBL-10037960-A
MANUFACTURING DATE:	**MANUFACTURED BY:** Planmeca Oy, 08800 Helsinki, FINLAND	
Complies with DHHS radiation performance standards 21 CFR subchapter J	CE 0598	

The following image shows the cephalometer label.

CEPHALOMETRIC EQUIPMENT	
Trademark: Planmeca Viso	
TYPE: ProCeph	
SN :	
Manufactured by: **Planmeca Oy Asentajankatu 6,** **00880 Helsinki, FINLAND**	30006497-B

The following image shows the beam limiting system label.

BEAM LIMITING SYSTEM	
TYPE: M001	**SN:**
ADDITIONAL FILTRATION: 0.2mm / 0.5mm Cu	
MANUFACTURING DATE:	
MANUFACTURED BY: Planmeca Oy, 08800 Helsinki,FINLAND	
Complies with DHHS radiation performance standards 21 CFR subchapter J	30006496-A

The following image shows the X-ray image receptor label.

X-ray image receptor		
TYPE:		
S/N :	Manufacturing Date:	30011874-A
Manufactured by: Planmeca Oy Asentajankatu 6, 00880 Helsinki, FINLAND		

1.6 Technical specifications

Maximum apparent resistance of supply mains

0.5 Ohm

1.6.1 Technical data

Classification	
Medical Device Directive	93/42/EEC (Class IIb)
RoHS	2011/65/EU
IEC 60601-1	Class I, type B
CISPR 11	Class B
IP Classification	IPX0
Applied parts (according to IEC 60601-1: 2012)	

Patient supports	As shown in section Patient supports in User Manuals
Patient handles	
Generator (according to IEC 60601-2-7: 1998)	
	Resonant-mode, DSP-controlled, 80 - 160 kHz
X-ray tube	
	Toshiba D-059SBR or SXR 130-10-0.5 SC
Focal spot size (according to IEC 60336: 2005)	
	0.5 x 0.5 mm
Filtration	
3D	Total 2.5 mm Al + 0.2 mm / 0.5 mm Cu
Pan (SmartPan) / ProCeph	Total 2.5 mm Al
Tube housing front cover quality equivalent filtration (not included in the specified total filtration)	0.3 mm Al @ 70 kV / HVL 2.6 mm Al
Anode voltage	
3D	80 - 120 kV ±5%
Pan (SmartPan)	60 - 84 kV ±5%
ProCeph	60 - 84 kV ±5%
Anode current	
3D	Toshiba D-059SBR: 1-12.5 mA ±10% SXR 130-10-0.5 SC: 1-16 mA ±10%
Pan (SmartPan)	Toshiba D-059SBR: 1-14 mA ±10% SXR 130-10-0.5 SC: 1-16 mA ±10%
ProCeph	Toshiba D-059SBR: 14 mA ±10% SXR 130-10-0.5 SC: 16 mA ±10%
mAs range	
	min. / max. as indicated ±(10% + 0.2 mAs)
Dose range and accuracy	
	Dose range min. / max. as indicated on system user interface. Accuracy of dosimetric indication (DAP, CTDI): ±40%
Linearity of radiation output	
	< 0.1
Exposure time	
3D	Pulsed, effective 1.5 - 36 s as indicated ±10%
Pan (SmartPan)	2.5 – 15.6 s as indicated ±10%
ProCeph	0.1 – 1.6 s as indicated ±10%
SID	
3D / Pan (SmartPan)	700 mm
Ceph	1700 mm (66.9 in.)

Magnification	
3D	1.40 - 1.71
Pan (SmartPan)	1.40
Ceph	1.13
Duty cycle for height adjustment	
	25 s ON / 400 s OFF
Line voltage	
	100 - 220 V~ / 50 - 60 Hz 230 - 240 V~ / 50 Hz
Line current	
	8 - 17 A
Input power	
Stand by	150 VA
Exposure	1800 W
Line harmonics	
	Cos better than 0.9
Max. permissible apparent impedance of supply mains	
	0.5 ohm (100 VAC)
Max. continuous heat dissipation	
	250 W
Internal fuse(s)	
One user replaceable fuse	100 - 220 V~ / 16A FF H 500 V 230 - 240 V~ / 8A FF H 500 V
Type	195100 ELU
External fuse(s)	
	100 - 220 V ~ / 16A min. - 20A max. T 250 V 230 - 240 V ~ / 10A min. - 20A max. T 250 V
Battery	
	Lithium battery: 3V, CR2032, Panasonic / Varta
Max. weight	
Base unit	165 kg (364 lb)
ProCeph	20 kg (44 lb)
Environmental requirements	
Transport:	
Temperature	-20°C - +60°C (-4°F - +140°F)
Relative humidity	10 - 90% RH (non-condensing)
Air pressure	700 - 1060 hPa
Storage:	
Temperature	-10°C - +50°C (+14°F - +122°F)
Relative humidity	10 - 90% RH (non-condensing)

Air pressure	700 - 1060 hPa
Operating:	
Temperature	+10°C - +35°C (+50°F - +95°F)
Relative humidity	10 - 90% RH (non-condensing)
Air pressure	800 - 1060 hPa
Max. altitude	2000 m (1.25 miles)
Image properties	
ProCeph:	
Flat panel pixel size	139 µm
Flat panel active surface	302 x 249 mm (11.89 x 9.80 in.)
3D:	
Flat panel pixel size	139 µm
Flat panel active surface	299.7 x 246.3 mm (11.80 x 9.70 in.)
Pan (SmartPan):	
Flat panel pixel size	139 µm
Flat panel active surface	8 - 25 x 146 mm (0.31 - 0.98 x 5.74 in.)
Operating requirements for ProFace program	
Optimum colour temperature	Approx. 6500 Kelvin
Even and uniform lighting	
No bright lights	

1.6.2 Original manufacturer

Planmeca Oy, Asentajankatu 6, FIN-00880, Helsinki, Finland

Phone: +358 20 7795 500, Fax: +358 20 7795 555, www.planmeca.com

1.7 User's statement

This section contains the user’s statement information for Planmeca Viso equipped with 120 kV tube head (Toshiba D-059SBR or Superior SXR 130-10-0.5 SC). Values differing between the tube head types are separately presented for each tube head type.

User's statement information for Planmeca Viso

Feature / property	Details
Radiation leakage technique factors	Toshiba D-059SBR or Superior SXR 130-10-0.5 SC: The maximum rated peak tube potential is 120 kV and the maximum rated continuous tube current is 2.1 mA for the maximum rated peak tube voltage.
Filtration	The Radiation port contains additional filtration of 0.2 mm or 0.5 mm Cu. When the X-ray beam is attenuated with the 4.3 mm Al (at 120kV) the resulting dose is 0.5 - 0.7 times the original.
Maximum attenuation equivalent of the front panel of the 3D sensor head	1.2 mmAl

User's statement information for Planmeca Viso

Feature / property	Details
Rated line voltage	100 V - 240 V~ ±10%
Maximum line current	Maximum 15 Amperes at 100 V~, 8 A at 230 V~
Technique factors that constitute the maximum line current condition	84 kV / 16 mA
Generator rating and duty cycle	1.5 kW, duty cycle approximately 1:10. The wait period is calculated using the following formula: $t_w = f(HS_{MAX} - HS_1) - f(HS_0)$ where: • HS_{MAX} = maximum tube anode heat storage capacity (28 kJ) • HS_0 = current tube anode heat storage • HS_1 = heat storage caused by next intended exposure (kV x mA x s) • f = tube anode cooling rate as a function of heat storage (given by tube manufacturer)
Maximum deviation of peak tube potential from indicated value	±5%
Maximum deviation of tube current from indicated value	±10%
Maximum deviation of exposure time from indicated value	±10%
X-ray current range	Toshiba D-0059SBR: • 60-65 kV: 2-14 mA • 66-80 kV: 2-12.5 mA • 81-84 kV: 2-11 mA • 85-90 kV: 2-10 mA • 91-100 kV: 2-9 mA • 101-120 kV: 2-8 mA SXR 130-10-0.5 SC: • 60 – 84 kV: 2- 16 mA • 85 – 90 kV: 2-14 mA • 91 – 100 kV: 2-12.5 mA • 101 – 120 kV: 2-11 mA
Lowest selectable current time product	• 3D: 3 mAs • Panorama: 16 mAs • Ceph: 1.6 mAs

1.8 Definition of measurement criteria

Definition of measurement criteria for Planmeca Viso

Criteria	Details
Exposure time	The beginning and end points of the exposure time are defined at **70%** of the peak radiation waveform measured with a calibrated X-ray monitor.
Peak tube potential	Is defined as the maximum voltage difference over the X-ray tube. It is measured with a calibrated non-invasive kVp meter.
Tube current	Is defined by measuring the voltage difference over mA feedback resistors. The values of mA feedback resistors are known, so the mA value can be calculated from the feedback voltage.
The nominal X-ray voltage together with the highest X-ray tube current obtainable from the high-voltage generator when operated at its nominal X-ray tube voltage	Toshiba D-059SBR: 120 kV 8 mA (3D mode) Superior SXR 130-10-0.5 SC: 120 kV 11 mA (3D mode)
The highest X-ray tube current together with the highest X-ray tube voltage obtainable from the high-voltage generator when operated at its highest X-ray tube current	Toshiba D-059SBR: 64 kV 14 mA (Ceph mode) Superior SXR 130-10-0.5 SC: 84 kV 16 mA
The X-ray tube voltage and X-ray tube current which result in the highest electric output power	Toshiba D-059SBR: 80 kV 12.5 mA Superior SXR 130-10-0.5 SC: 84 kV 16 mA
The nominal electric power for a load time of 0.1 s and at the nominal X-ray tube voltage	Toshiba D-059SBR: 120 kV 8 mA - 960 W Superior XR 130-10-0.5 SC: 120 kV 11 mA - 1320 W
The nominal electric power for a load time of 4 s and at the nominal X-ray tube voltage	Toshiba D-059SBR: 120 kV 8 mA - 960 W Superior SXR 130-10-0.5 SC: 120 kV 11 mA - 1320 W
The reference current time product	1.2 mAs Irradiation time 0.2 s, X-ray tube current 6 mA, X-ray tube voltage: whole range
Nominal anode input power of the X-ray tube	1152 W
Maximum anode heat content of the X-ray tube	Toshiba D-059SBR: 28 kJ Superior SXR 130-10-0.5 SC: 31.5 kJ
Target material of the X-ray tube	Tungsten anode.
Target angle with respect to the reference axis	10°
Filtration in terms of quality equivalent filtration of the X-ray tube	Inherent filtration at least 0.8 Al/50 kV according to IEC 522/1976
Maximum X-ray tube assembly heat content	Toshiba D-059SBR: 425 kJ • Superior SXR 130-10-0.5 SC: 425 kJ
Maximum continuous heat dissipation of the X-ray tube assembly	Toshiba D-059SBR: 2,4 kJ/min Superior SXR 130-10-0.5 SC: 2,4 kJ/min
Target angle with respect to the reference axis	10°

Definition of measurement criteria for Planmeca Viso

Criteria	Details
Dimensions of the tube head assembly (WxHxD)	235 mm x 340 mm x 120 mm
Weight of the tube head assembly	13.4 kg without collimator assembly. 16.4 kg with collimator assembly.
Tolerances of the focal spot on the reference axis	X = ±0.5 mm (sideways). Y = ±0.5 mm (in depth). Z = ±0.5 mm (in height).
Values of loading factors concerning leakage radiation	120 kV, 11 mA

Anode heating/cooling curve of the X-ray tube

Toshiba D-059SBR:

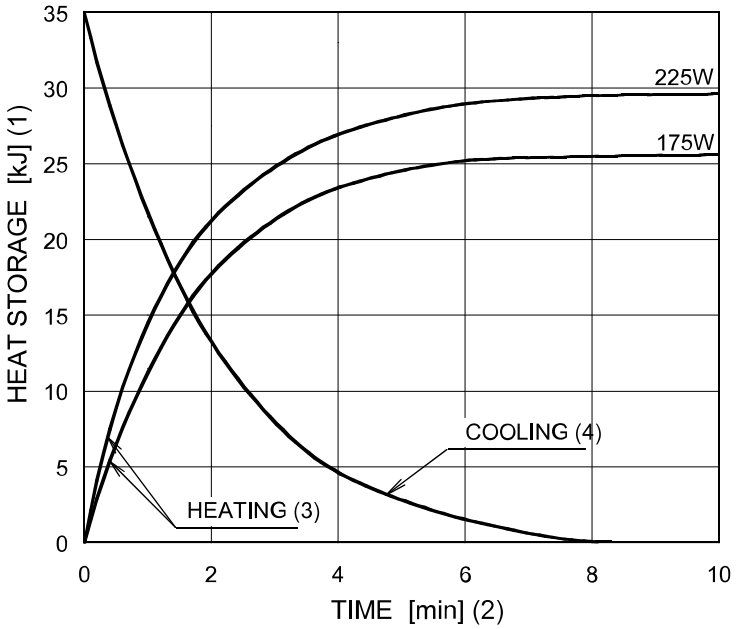

1. Heat storage (kJ)	2. Time (minutes)
3. Heating	4. Cooling

Superior SXR 130-10-0.5 SC:

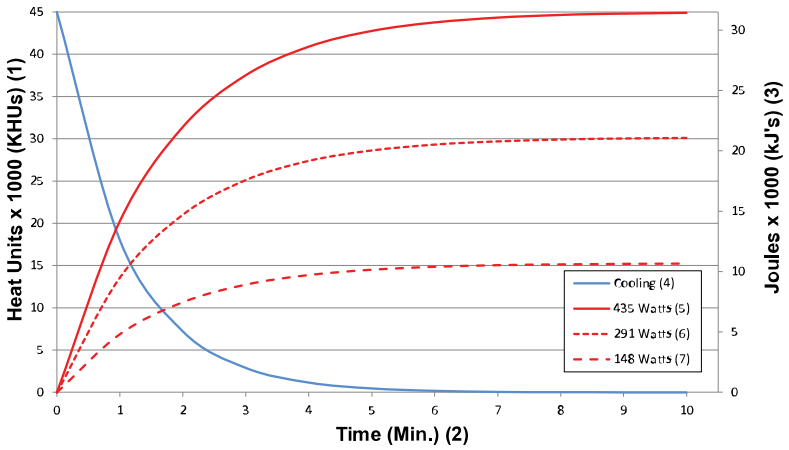

1. Heat units x 1000 (KHUs)	2. Time (minutes)	3. Joules x 1000 (kJs)
4. Cooling	5. Heating (435 Watts)	6. Heating (291 Watts)
7. Heating (148 Watts)		

Single load rating of X-ray tube

Toshiba D-059SBR:

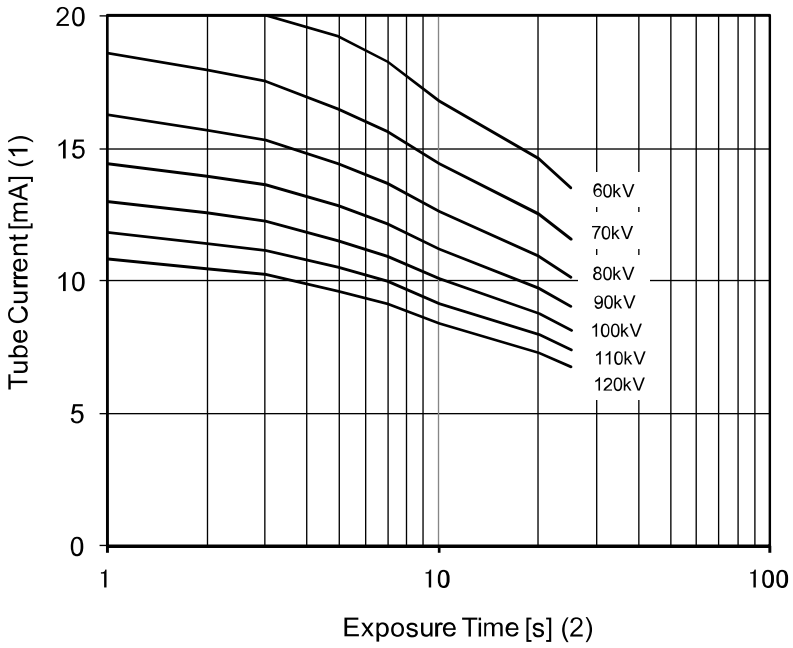

1. Tube current (mA)	2. Exposure time (seconds)

Superior SXR 130-10-0.5 SC:

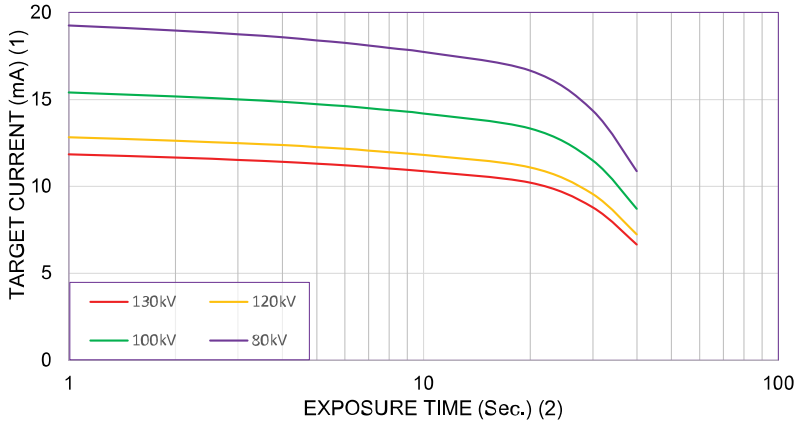

1. Target current (mA)	2. Exposure time (seconds)

Reference axis to which the target angle and the focal spot characteristics of the X-ray tube refer

90° with respect to the anode-cathode axis.

Emission & filament characteristics of the X-ray tube

Toshiba D-059SBR:

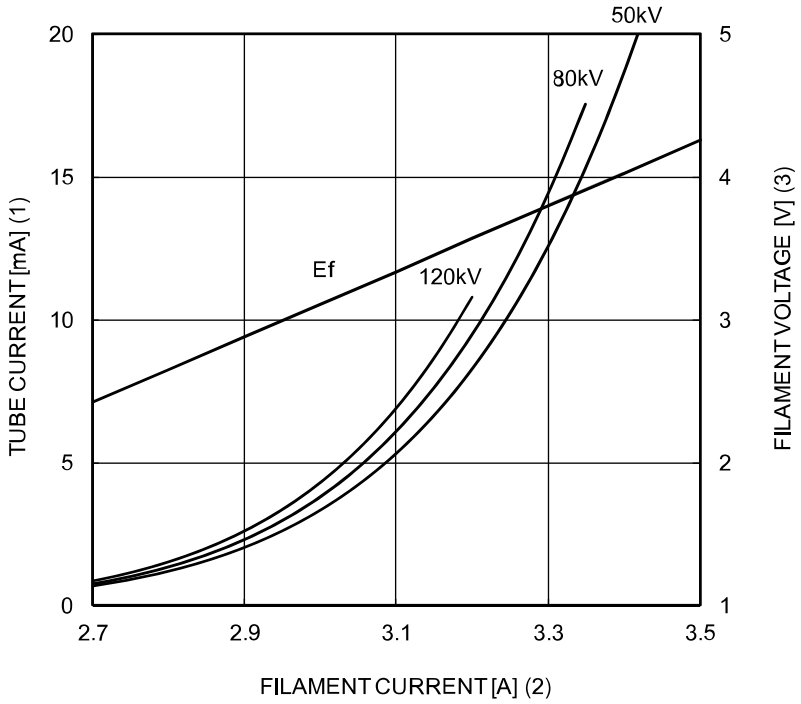

1. Tube current (mA)	2. Filament current (A)	3. Filament voltage (V)

Superior SXR 130-10-0.5 SC:

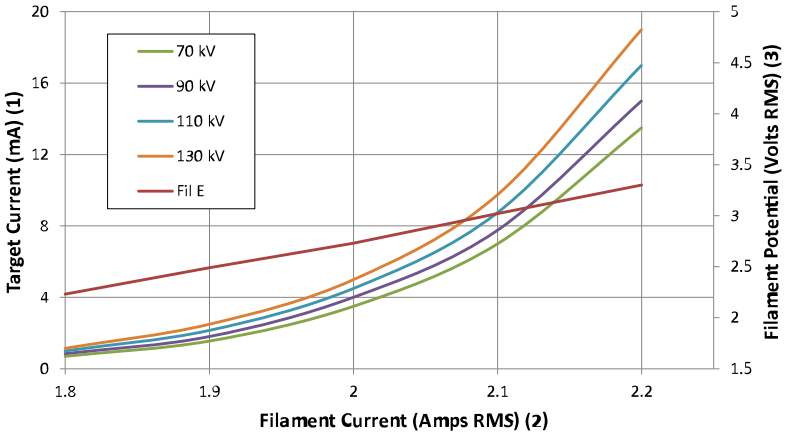

1. Target current (mA)	2. Filament current (Amps RMS)	3. Filament potential (Volts RMS)

X-ray tube assembly heating/cooling curve

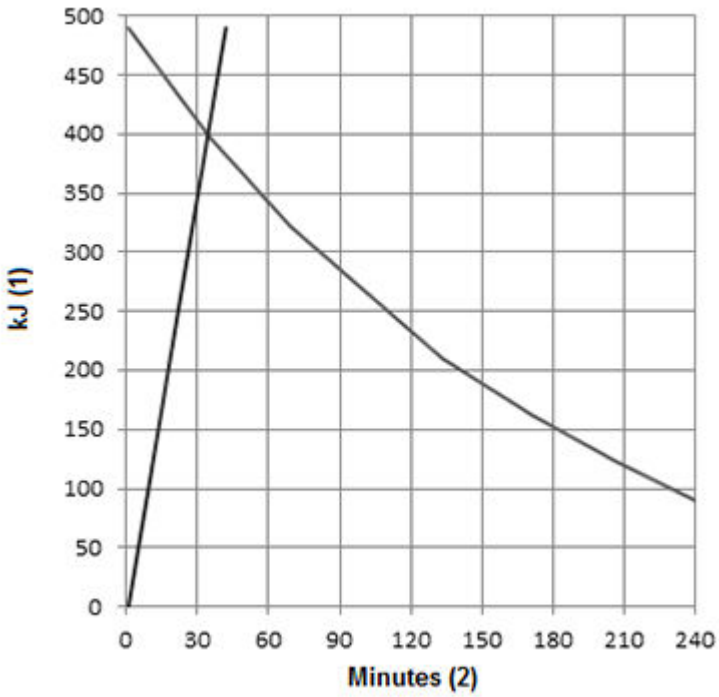

1. kJ	2. Minutes

Tube head assembly

Reference axis to which the target angle and the focal spot characteristics of the tube head assembly refer / Indication of focal spot

90˚

SID, SOD and FOV

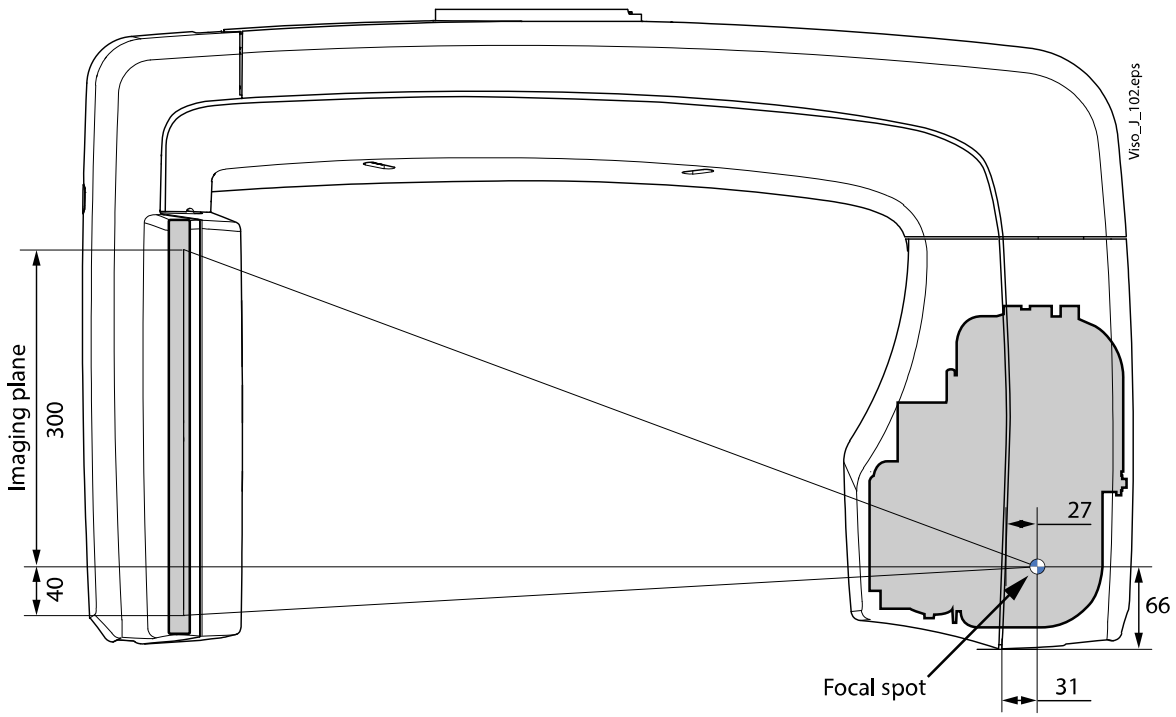
Viso_J_102.eps
Imaging plane
300
40
27
66
Focal spot
31

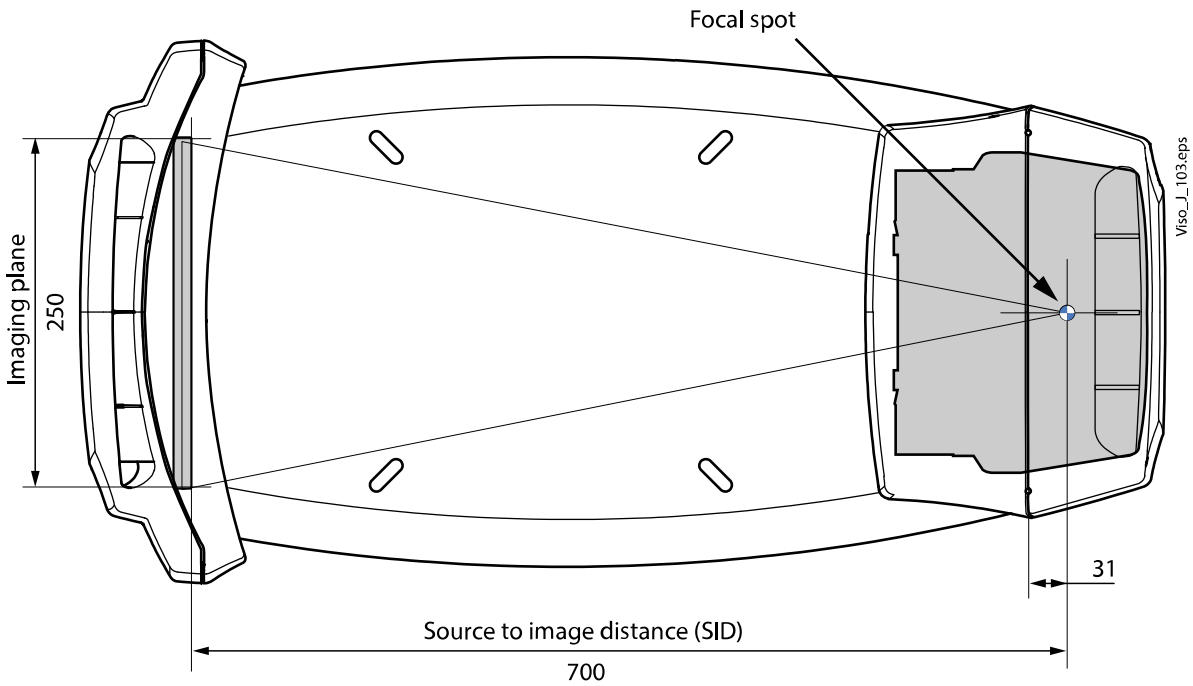
Focal spot
Viso_J_103.eps
Imaging plane
250
31
Source to image distance (SID)
700

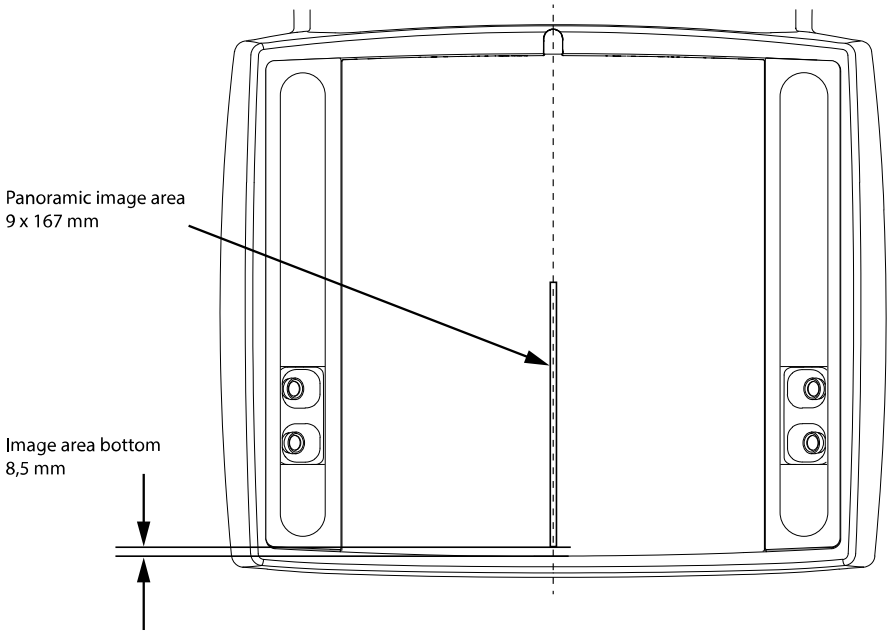

Statement of reference loading conditions (leakage radiation)

The maximum rated peak tube potential is **120 kV** and the maximum rated continuous tube current is 2.1 mA for the maximum rated peak tube voltage.

1.9 EMC information

WARNING

Use of any accessories and cables other than those specified in the X-ray unit's documentation, with the exception of cables sold by Planmeca as replacement parts for internal components, may result in increased emission or decreased immunity of the X-ray unit.

WARNING

The X-ray unit should not be used adjacent to or stacked with other equipment. If adjacent or stacked use is necessary, the X-ray unit should be observed to verify its normal operation in the configuration in which it is used.

Guidance and manufacturer's declaration - electromagnetic emissions		
The Planmeca Viso X-ray unit is intended for use in the electromagnetic environment specified below. The customer or the user of the X-ray unit should assure that it is used in such an environment.		
Emissions test	**Compliance**	**Electromagnetic environment – guidance**
RF emissions CISPR 11	Group 1	The X-ray unit uses RF energy only for its internal function. Therefore, its RF emissions are very low and are not likely to cause any interference in nearby electronic equipment.

Guidance and manufacturer's declaration - electromagnetic emissions		
RF emissions CISPR 11	Class B	The X-ray unit is suitable for use in all establishments, including domestic establishments and those directly connected to the public low-voltage power supply network that supplies buildings used for domestic purposes.
Harmonic emissions IEC 61000-3-2	Class A	
Voltage fluctuations/ flicker emissions IEC 61000-3-3	Complies	

Guidance and manufacturer's declaration - electromagnetic immunity			
The Planmeca Viso X-ray unit is intended for use in the electromagnetic environment specified below. The customer or the user of the X-ray unit should assure that it is used in such an environment.			
Immunity test	**IEC 60601 test level**	**Compliance level**	**Electromagnetic environment- guidance**
Electrostatic discharge (ESD) IEC 61000-4-2	±6 kV contact ±8 kV air	±6 kV contact ±8 kV air	Floors should be wood, concrete or ceramic tile. If floors are covered with synthetic material, the relative humidity should be at least 30%.
Electrical fast transient/ burst IEC 61000-4-4	±2 kV for power supply lines ±1 kV for input/output lines	±2 kV for power supply lines ±1 kV for input/output lines	Mains power quality should be that of a typical commercial or hospital environment
Surge IEC 61000-4-5	±1 kV line to line ±2 kV line to earth	±1 kV line to line ±2 kV line to earth	Mains power quality should be that of a typical commercial or hospital environment.
Voltage dips, short interruptions and voltage variations on power supply input lines IEC 61000-4-11	<5 % U_T (>95 % dip in U_T) for 0,5 cycle 40 % U_T (60 % dip in U_T) for 5 cycles 70 % U_T (30 % dip in U_T) for 25 cycles <5 % U_T (>95 % dip in U_T) for 5 s	<5 % U_T (>95 % dip in U_T) for 0,5 cycle 40 % U_T (60 % dip in U_T) for 5 cycles 70 % U_T (30 % dip in U_T) for 25 cycles <5 % U_T (>95 % dip in U_T) for 5 s	Mains power quality should be that of a typical commercial or hospital environment. If the user of the X-ray unit requires continued operation during power mains interruptions, it is recommended that the X-ray unit be powered from an uninterruptible power supply.

Guidance and manufacturer's declaration - electromagnetic immunity			
Power frequency(50/60 Hz) magnetic field IEC 61000-4-8	3 A/m	3 A/m	Power frequency magnetic fields should be at levels characteristic of a typical location in a typical commercial or hospital environment. The power frequency magnetic field should be measured in the intended installation location to assure that it is sufficiently low.
NOTE U_T is the a.c. mains voltage prior to application of the test level.			

Guidance and manufacturer's declaration - electromagnetic immunity			
The Planmeca Viso X-ray unit is intended for use in the electromagnetic environment specified below. The customer or the user of the X-ray unit should assure that it is used in such an environment.			
Immunity test	**IEC 60601 test level**	**Compliance level**	**Electromagnetic environment-guidance**

Guidance and manufacturer's declaration - electromagnetic immunity			
Conducted RF	3 Vrms	3 Vrms	Portable and mobile RF communications equipment should be used no closer to any part of the X-ray unit, including cables, than the recommended separation distance calculated from the equation applicable to the frequency of the transmitter. **Recommended separation distance** **d** = 1,2 √P **d** = 1,2 √P 80 MHz to 800 MHz **d** = 2,3 √P 800 MHz to 2.5 GHz where **P** is the maximum output power rating of the transmitter in watts (W) according to the transmitter manufacturer and **d** is the recommended separation distance in metres (m). Field strengths from fixed RF transmitters, as determined by an electromagnetic site survey,[a] should be less than the compliance level in each frequency range.[b] Interference may occur in the vicinity of equipment marked with the following symbol:
IEC 61000-4-6	150 kHz to 80 MHz		
Radiated RF	3 V/m	3 V/m	
IEC 61000-4-3	80 MHz to 2.5 GHz		
NOTE 1: At 80 MHz and 800 MHz, the higher frequency range applies. NOTE 2: These guidelines may not apply in all situations. Electromagnetic propagation is affected by absorption and reflection from structures, objects and people.			
[a] Field strengths from fixed transmitters, such as base stations for radio (cellular/cordless) telephones and land mobile radios, amateur radio, AM and FM radio broadcast and TV broadcast cannot be predicted theoretically with accuracy. To assess the electromagnetic environment due to fixed RF transmitters, an electromagnetic site survey should be considered. If the measured field strength in the location in which the X-ray unit is used exceeds the applicable RF compliance level above, the X-ray unit should be observed to verify normal operation. If abnormal performance is observed, additional measures may be necessary, such as re-orienting or relocating the X-ray unit. [b] Over the frequency range 150 kHz to 80 MHz, field strengths should be less than 3 V/m.			

Recommended separation distances between portable and mobile RF communications equipment and Planmeca Viso X-ray unit			
The Planmeca Viso X-ray unit is intended for use in an electromagnetic environment in which radiated RF disturbances are controlled. The customer or the user of the Planmeca Viso X-ray unit can help prevent electromagnetic interference by maintaining a minimum distance between portable and mobile RF communications equipment (transmitters) and the Planmeca Viso X-ray unit as recommended below, according to the maximum output power of the communications equipment.			
Rated maximum output power of transmitter W	Separation distance according to frequency of transmitter m		
	150 kHz to 80 MHz d = 1,2 √P	80 MHz to 800 MHz d = 1,2 √P	800 MHz to 2.5 GHz d = 2,3 √P
0.01	0.12	0.12	0.23
0.1	0.38	0.38	0.73
1	1.2	1.2	2.3
10	3.8	3.8	7.3
100	12	12	23
For transmitters rated at a maximum output power not listed above, the recommended separation distance d in meters (m) can be estimated using the equation applicable to the frequency of the transmitter, where P is the maximum output power rating of the transmitter in watts (W) according to the transmitter manufacturer. NOTE 1: At 80 MHz and 800 MHz, the separation distance for the higher frequency range applies. NOTE 2: These guidelines may not apply in all situations. Electromagnetic propagation is affected by absorption and reflection from structures, objects and people.			

2 Settings

CAUTION

Some of the settings can be used to alter the operation of the X-ray unit. Never use functions that you are not familiar with.

NOTE

The options shown on the touch screen depend on the unit configuration. The views and values shown in this manual are only examples.

NOTE

The illustrations shown on the touch screen are based on approximate patient anatomy. The actual exposure area depends on the individual anatomy of the patient.

NOTE

Never allow patients to touch the screen when they are positioned in the X-ray unit. Touching the screen during exposure will stop the imaging process.

The unit has a number of additional functions for special requirements. The function modes that can be entered without a password are **User** settings and **About** general information of the X-ray unit.

Technical settings are for the use of service personnel only and are protected with a password.

In this manual, only some of the settings are described, all other menus are described in the X-ray unit's user's manual.

The settings are entered as follows: Touch the **setting symbol** on the main display.

You can return to the **Main** display by touching the **setting symbol** at the top left corner.

2.1 Technical settings

To enter the technical settings, select the **Technical** tab. The technical setting mode is password protected and the password prompt displays when the mode is selected for the first time after switching the unit on.

The password is **1701**.

2.1.1 Calibrations

Select **Calibrations**. The unit calibrations are performed in this mode.

NOTE

Detailed descriptions of calibrations are given in respective sections later in this manual.

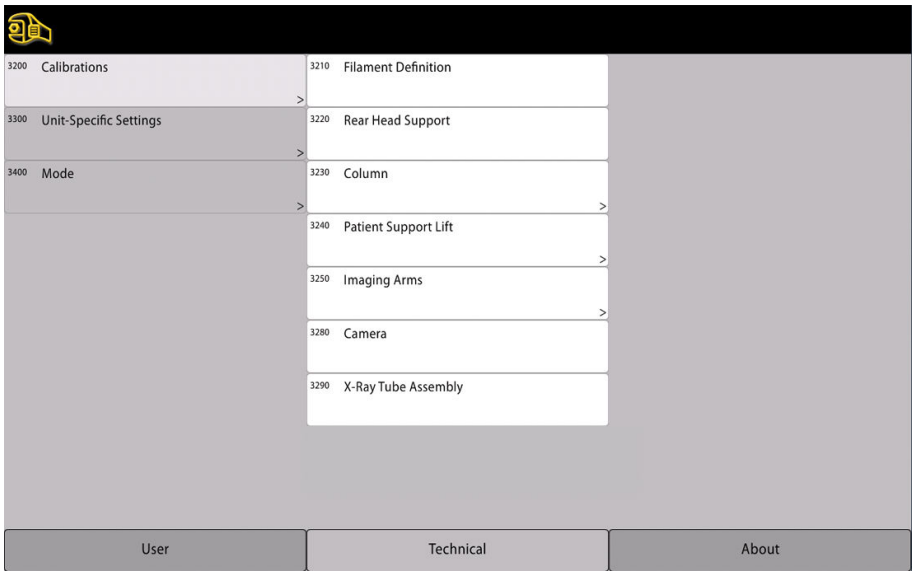

Filament Definition

NOTE

The X-ray tube must be cold when the filament definition is performed.

The X-ray tube filament definition must be performed whenever the tube head and/or the Power supply PCB is replaced. To perform the X-ray tube filament definition, select **Filament Definition**. Press and hold down the exposure switch until the series of exposures ends.

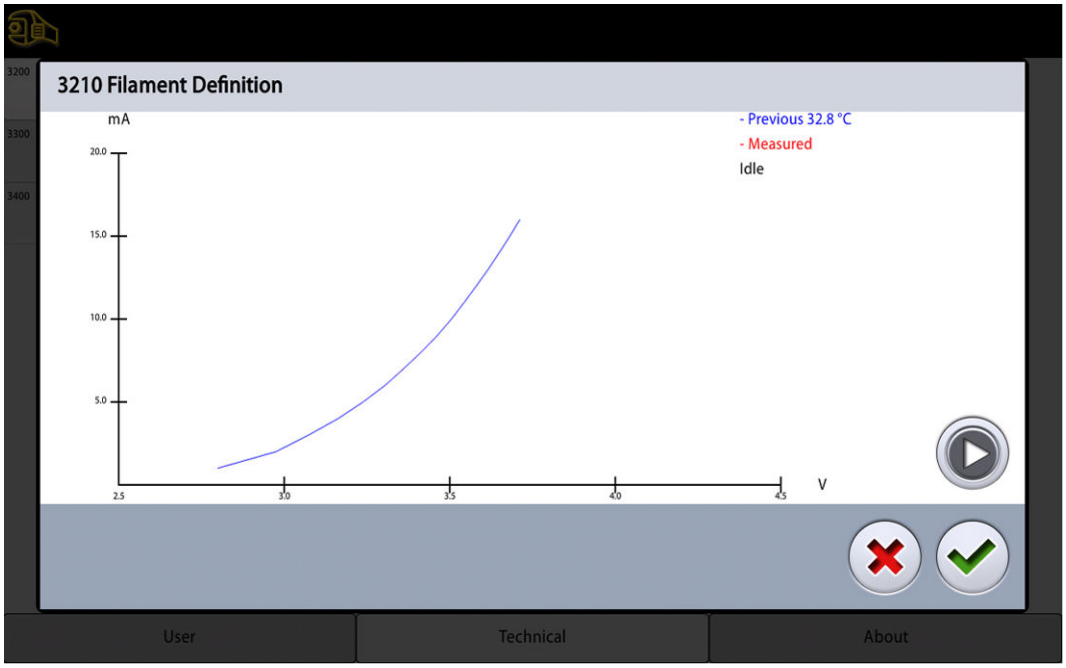

2.1.2 Unit-Specific Settings

Select **Unit-Specific Settings**.

2.1.2.1 Set Parameter Limits

In this mode the maximum and minimum values of the kV and the minimum mA range can be set for panoramic, cephalometric and 3D exposures.

- Select **Panoramic:** The following display appears. Select the maximum and minimum kilovolt and milliampere values with the plus and minus buttons.
- Select **Cephalo:** The following display appears. Select the maximum and minimum kilovolt, and minimum milliampere values with the plus and minus buttons.
- Select **3D:** The following display appears. Select the maximum and minimum kilovolt, and minimum milliampere values with the plus and minus buttons.

2.1.2.2 Exposures

- **Exposure**

  In this mode it is possible to check the unit tube head's exposure statistics.

  The display shows the time and the date of the latest exposure, the serial number of the unit and the exposure counters of the panoramic, cephalometric, tomographic and 3D exposures. The total amount of mAs, energy and exposure time are also shown.
- **Panoramic DAP**, **Cephalostat DAP** and **3D DAP**

  The patient's radiation dose will be shown in a pop-up window after each exposure. Radiation dose is indicated in terms of DAP (Dose Area Product) and calculated separately for each exposure. The measurement unit for DAP is milligray per square centimeter (mGy*cm²). The DAP values are based directly to the measurements made from the X-ray beam.

  If you need to calibrate the DAP values which are shown in the pop-up windows select the desired DAP on the Exposures display.

  Use a DAP meter to measure the radiation dose and then compare the measured dose (reading on DAP meter) with the calculated dose (value shown in pop-up window). If the measured dose is lower than the calculated dose, touch the left arrow to decrease the percentage value. If the measured dose is higher than the calculated dose, touch the right arrow to increase the percentage value. The setting can be adjusted between 10% and 300%.

  NOTE

  You will have to calibrate DAP values separately for panoramic, cephalometric and 3D exposures.

2.1.2.3 Clear Error History

To clear X-ray unit's error history data, select **Clear Error History** and touch the green check mark button.

2.1.3 Mode

Select **Mode**. With the options in this display you can select between normal and exhibition mode and set the test mode.

2.1.3.1 Set Normal Mode

Select **Set Normal Mode** to enter to normal mode.

2.1.3.2 Set Normal Mode

Select **Set Normal Mode** to enter to normal mode.

2.1.3.3 Set Exhibition Mode

Select **Set Exhibition Mode**. The exhibition mode allows you to demonstrate all the Viso X-ray programs. When this option is selected no radiation is generated when you press the exposure button. The programs can be selected and the C-arm will move normally but no radiation will be generated and no radiation warning signals will be given, i.e. this is a “dummy run” function for training and demonstration purposes.

If you touch green check mark ProFace images can be taken when the X-ray unit is connected to the PC.

If you touch the red cross mark you can drive the ProFace exposure movement but an image is not taken.

3 Error messages

The X-ray unit incorporates a self-checking feature that monitors the operation of the unit. If the system detects a technical fault an error message appears on the touch screen.

An error message indicates that the X-ray unit has a problem that needs to be solved before further exposures can be taken. The X-ray unit will not accept any commands from the user until the error message is cleared from the touch screen.

Help messages

The X-ray unit incorporates a self-checking feature that monitors the operation of the unit. If the system detects an operating error a help message appears on the touch screen.

The X-ray unit will not accept any commands from the user until the help message is cleared from the touch screen. Clear the message by touching the green check mark.

The help messages are listed and described in the X-ray unit's user's manual.

3.1 Motorised motion related errors (E2xx)

Error	Explanation		Comments
E210	Open circuit in	Open circuit in lift motor which is connected to PSU PCB J10.	
E211		Open circuit in shoulder motor which is connected to PSU PCB J7 and controlled by MCM module 1.	Check the motor, interface and cable.
E212		Open circuit in elbow motor which is connected to PSU PCB J7 and controlled by MCM module 2.	Check the motor, interface and cable.
E215		Open circuit in patient support motor which is connected to CPU PCB J20 and controlled by MCM module 3.	Check the motor, interface and cable.
E216		Open circuit in c-arm motor which is connected to CAM PCB J21 and controlled by MCM module 4.	Check the motor, interface and cable.
E217		Open circuit in collimator Y1 upper motor which is connected to CAM PCB J23 and controlled by MCM module 5.	Check the motor, interface and cable.

Error	Explanation		Comments
E218		Open circuit in collimator X motor which is connected to CAM PCB J24 and controlled by MCM module 5.	Check the motor, interface and cable.
E219		Open circuit in collimator X1 right motor which is connected to CAM PCB J24 and controlled by MCM module 5.	Check the motor, interface and cable.
E220		Open circuit in collimator Y motor which is connected to CAM PCB J25 and controlled by MCM module 5.	
E221		Open circuit in tube head rotation motor which is connected to CAM PCB J22 and controlled by MCM module 6.	
E222		Open circuit in collimator filter revolver motor which is connected to CAM PCB J22 and controlled by MCM module 6.	
E223		Open circuit in collimator filter motor which is connected to CAM PCB J20 and controlled by MCM module 7.	
E224		Open circuit in collimator X2 left motor which is connected to CAM PCB J20 and controlled by MCM module 7.	
E225		Open circuit in collimator Y2 lower motor which is connected to CAM PCB J25 and controlled by MCM module 7.	

Error	Explanation		Comments
E226		Open circuit in tube head rotation motor which is connected to CAM PCB J31 and controlled by MCM module 8.	
E230	Overcurrent	Overcurrent detected in lift motor which is connected to PSU PCB J10.	Too high current detected in the motor and the movement has been stopped. Check the motor cable. If necessary then replace the PSU PCB.
E231		Overcurrent detected in shoulder motor which is connected to PSU PCB J7 and controlled by MCM module 1.	Too high current detected in the motor and the movement has been stopped. Check the motor cable.

Error code	Explanation		Comments
E232	Overcurrent	Overcurrent detected in elbow motor which is connected to PSU PCB J7 and controlled by MCM module 2.	Too high current detected in the motor and the movement has been stopped. Check the motor cable.
E235		Overcurrent detected in patient support motor which is connected to CPU PCB J20 and controlled by MCM module 3.	Too high current detected in the motor and the movement has been stopped. Check the motor cable.
E236		Overcurrent detected in c-arm motor which is connected to CAM PCB J21 and controlled by MCM module 4.	Too high current detected in the motor and the movement has been stopped. Check the motor cable.
E237		Overcurrent detected in collimator Y upper motor which is connected to CAM PCB J23 and controlled by MCM module 5.	Too high current detected in the motor and the movement has been stopped. Check the motor cable.
E238		Overcurrent detected in collimator X motor which is connected to CAM PCB J24 and controlled by MCM module 5.	Too high current detected in the motor and the movement has been stopped. Check the motor cable.
E239		Overcurrent detected in collimator X1 right motor which is connected to CAM PCB J24 and controlled by MCM module 5.	Too high current detected in the motor and the movement has been stopped. Check the motor cable.

E240		Overcurrent detected in collimator Y motor which is connected to CAM PCB J25 and controlled by MCM module 5.	
E241		Overcurrent detected in tube head rotation motor which is connected to CAM PCB J22 and controlled by MCM module 6.	
E242		Overcurrent detected in collimator filter revolver motor which is connected to CAM PCB J22 and controlled by MCM module 6.	
E243		Overcurrent detected in collimator filter motor which is connected to CAM PCB J20 and controlled by MCM module 7.	
E244		Overcurrent detected in collimator X2 left motor which is connected to CAM PCB J20 and controlled by MCM module 7.	

Error code	Explanation		Comments
E245	Overcurrent	Overcurrent detected in collimator Y2 lower motor which is connected to CAM PCB J25 and controlled by MCM module 7.	
E246		Overcurrent detected in tube head rotation motor which is connected to CAM PCB J31 and controlled by MCM module 8.	
E251	Directional error	Directional error at shoulder motor which is connected to PSU PCB J7 and controlled by MCM module 1.	The motor drives the mechanism into the wrong position. Check the sensors and the cabling.
E252		Directional error at elbow motor which is connected to PSU PCB J7 and controlled by MCM module 2.	The motor drives the mechanism into the wrong position. Check the sensors and the cabling.
E256		Directional error at c-arm motor which is connected to CAM PCB J21 and controlled by MCM module 4.	The motor drives the mechanism into the wrong direction. Check the sensors and the cabling.
E267	Patient support error	Patient support moved during the patient support locking mechanism.	

E270	Timeout	Timeout in lift motor which is connected to PSU PCB J10.	Check the sensor, cable, motor and the PSU PCB.
E275		Timeout in patient support motor which is connected to CPU PCB J20 and controlled by MCM module 3.	Check the sensors, cables and the motor.
E277		Timeout in collimator Y1 upper motor which is connected to CAM PCB J23 and controlled by MCM module 5.	Check the sensors, cables and the motor.
E278		Timeout in collimator X motor which is connected to CAM PCB J24 and controlled by MCM module 5.	Check the sensors, cables and the motor.
E279		Timeout in collimator X1 right motor which is connected to CAM PCB J24 and controlled by MCM module 5.	Check the sensors, cables and the motor.
E280		Timeout in collimator Y motor which is connected to CAM PCB J25 and controlled by MCM module 5.	Check the sensors, cables and the motor.
E281		Timeout in tube head rotation motor which is connected to CAM PCB J22 and controlled by MCM module 6.	Check the sensors, cables and the motor.

Error code	Explanation		Comments
E282	Timeout	Timeout in collimator filter revolver motor which is connected to CAM PCB J22 and controlled by MCM module 6.	Check the functionality of the belt cables and the motor.
E283		Timeout in collimator filter motor which is connected to CAM PCB J20 and controlled by MCM module 7.	Check the adjustments and the movement area.
E284		Timeout in collimator X2 left motor which is connected to CAM PCB J20 and controlled by MCM module 7.	Check the adjustments and the movement area.
E285		Timeout in collimator Y2 lower motor which is connected to CAM PCB J25 and controlled by MCM module 7.	Check the adjustments and the movement area.
E286		Timeout in tube head rotation motor which is connected to CAM PCB J31 and controlled by MCM module 8.	Check the adjustments and the movement area.
E287		Timeout in lift motor during patient support vertical movement.	
E290	Rotating tube head in wrong position	Rotating tube head in wrong position.	Check the adjustments and the movement area.

E291	Collimator	Collimator right X self test failed.	
E292		Collimator left X self test failed.	
E293		Collimator upper Y self test failed.	
E294		Collimator lower Y self test failed.	
E295		Collimator filter revolver self test failed.	
E296		Collimator X collision detected.	
E297		Collimator Y collision detected.	
E298	Tube head rotation	Tube head rotation self test failed	
E299	Z lock	Z lock test failed	

X-ray generation related errors (E3xx)

The following table lists the X-ray generation related errors.

Error code	Explanation		Comments
E301	Filament voltage	Filament voltage missing completely.	Exposure not possible. Check the cabling, interfaces and PSU- PCB and tube head.
E302		Filament voltage too low during preheat.	Exposure not possible. Check the cabling, interfaces and PSU- PCB and tube head.
E303		Filament voltage too high during preheat.	Exposure not possible. Check the tube head and the PSU-PCB.

Error code	Explanation		Comments
E311	Tube voltage	Tube voltage missing completely.	Exposure interrupted.
E312		Tube voltage too low.	Exposure not possible. Check the tube head and the PSU PCB.
E313		Tube voltage too high.	Exposure not possible. Check the prefilament values are correct or perform the prefilament calibration again.
E317		Tube voltage overshot suddenly without arching.	Exposure interrupted. Check the interface, cabling and the PSU PCB.
E318	Tube voltage	Tube mA overshot suddenly without arching.	Exposure interrupted. Check the functionality of the tube head and the PSU PCB.
E319	Tube voltage	Tube pulse length exceeded the requested value.	

E321	Tube current	Tube current missing completely.	Exposure interrupted. Check the interface, cabling and the PSU PCB.
E322		Tube current too low.	Exposure interrupted. Check the interface, cabling and the PSU PCB.
E323		Tube current too high.	Exposure interrupted. Perform the preheat calibration again. Check the interface, cabling and the PSU PCB.
E332	Arcing	Severe arcing across x-ray tube.	Exposure interrupted. Check the tube head functionality. If the X-ray unit has not been used for a week or more, take four test exposures with a one-minute interval between exposures. Use the lowest possible kV and mA values and a long exposure time.
E334		Severe arcing at tube head anode end.	Exposure interrupted.
E336		Severe arcing at tube head cathode end.	Exposure interrupted.
E342	Monitoring errors	Exposure pulsing fault.	
E343		Conflict between assembled and configured X-ray tube type.	Exposure not possible. Check that correct type of tube head is selected in the **3100 Unit Configuration** menu, in **Tube Type** setting.

3.2 Feedback errors (E4xx)

The following table lists the feedback errors.

Error code	Explanation	Comments

E401	Tube head offsets	Tube head KVPOS offset failure, short- circuited.	Exposure not possible. Check the cabling between the FBK and the CAM PCB. Check also the functionality of the FBK PCB.
E402		Tube head KVPOS offset failure, out of bounds.	Exposure not possible. Check the cabling between the FBK and the CAM PCB. Check also the functionality of the FBK PCB.
E403		Tube head offset KVNEG failure, short- circuited.	Exposure not possible. Check the cabling between the FBK and the CAM PCB. Check also the functionality of the FBK PCB.
E404		Tube head KVNEG offset failure, out of bounds.	Exposure not possible. Check the cabling between the FBK and the CAM PCB. Check also the functionality of the FBK PCB.
E405		Tube head MAPOS offset failure, short- circuited.	Exposure not possible. Check the cabling between the FBK and the CAM PCB. Check also the functionality of the FBK PCB.
E406		Tube head MAPOS offset failure, out of bounds.	Exposure not possible. Check the cabling between the FBK and the CAM PCB. Check also the functionality of the FBK PCB.
E407		Tube head MANEG offset failure, short- circuited.	Exposure not possible. Check the functionality of the FBK PCB.
E408		Tube head MANEG offset failure, out of bounds.	Exposure not possible. Check the functionality of the FBK PCB.
E409		Tube head filament offset failure, out of bounds.	Exposure not possible. Check the functionality of the FBK PCB.

Error code	Explanation	Comments

E411	Tube head signals	Tube head kV-feedback imbalance.	Exposure interrupted.
E412		Tube head mA-feedback imbalance.	Exposure interrupted.
E414		Tube head temperature measurement error (signal out of bounds).	Exposure not possible. Check the temperature measurement sensor and the FBK PCB.
E415		Tube head electronics supply voltage error.	Check the FBK PCB and the cabling between the FBK and the CAM PCB.
E416		Tube head not calibrated.	Exposure not possible. Perform the preheat calibration again. Check the functionality of the FBK PCB.
E417		Tube head type not supported.	Exposure not possible.
E421	Sensors signal errors (open circuits)	Failure in column height potentiometer.	Check the sensors and the cabling.
E422		Failure in shoulder potentiometer.	Check the sensors and the cabling.
E423		Failure in elbow potentiometer.	Check the sensors and the cabling.
E424		Failure in c-arm potentiometer.	Check the sensors and the cabling.
E427		Failure in patient rotation limit switch which is connected to CEPH PCB J4.	
E428		Failure in patient support height potentiometer.	
E441	Key stuck in patient position control key pad	Failure in Z-Motor up key.	Check the button.
E451	Key stuck elsewhere	CEPH CA; Height adjusting up/down button	Check the button.

3.3 Communication errors (E6xx)

The following table lists the communication errors.

Error code	Explanation	Comments

E601	Internal (CAM)	Total data communication failure towards CAM.	Exposure not possible. Check the cable of the CAM PCB and that it is installed correctly.
E602		Total data communication failure from CAM.	Exposure not possible. Check the cable of the CAM PCB and that it is installed correctly.
E603		Data errors towards CAM.	
E604		Data errors received from CAM.	
E605		No clock signal received at CAM.	Check the cable of the CAM PCB and that it is installed correctly. Check the functionality of the battery and that it is installed correctly.
E606		Data line polarity is wrong at CAM.	Check the cable of the CAM PCB and that it is installed correctly.
E607		No clock signal received from CAM.	Check the cable of the CAM PCB and that it is installed correctly. Check the functionality of the battery and that it is installed correctly.
E608		Data line polarity is wrong from CAM.	Check the cable of the CAM PCB and that it is installed correctly.
E612	Internal (other)	Error in communication with tube.	Check the cabling between the CAM and FBK PCB. Check the functionality of the FBK PCB.
E624	Network (ETHERNET)	Error in communication with external GUI.	
E627		Error in communication with ProCeph.	
E628		Error in communication with 3D sensor.	
E629		Ethernet cable is disconnected or it is broken.	Check the Ethernet cable connection and cabling.
E630		Error in GUI - CPU communication.	Reboot Viso. If problem persists, check GUI - CPU cabling.

3.4 Calibration errors (E7xx)

The following table lists the calibration errors.

Error code	Explanation		Comments
E701	Missing calibration	Tube head filament definition not done.	Perform tube filament definition again.

E705	Tube filament definition	Tubehead filament calibration failure (discontinuous tube current).	The current in the tube head is not high enough. Perform the preheat calibration again.
E706		Tubehead filament calibration failure (mA too low).	The current in the tube head is not raising on the voltage area. Perform the preheat calibration again. Check the functionality of the tube head.
E710	Primary collimator	Primary y-collimator opening is too big.	Adjust the lower blade upwards or the upper blade downwards.
E711		3D Primary x-collimator opening is too wide.	Adjust the left blade to the right or the right blade to the left.
E712		Collimator calibration failed.	

3.5 System conflicts (E8xx)

The following table lists the system conflict errors.

Error code	Explanation		Comments
E814	Missing internal parts	Missing internal parts, CAM not found.	Check the functionality of the CAM PCB.
E815		Missing internal parts, TUBE not found.	
E818		Missing internal parts, Ethernet module not found.	Check the functionality of the Ethernet PCB and that it is attached properly on the CPU.
E821	Software compatibility	CPU FPGA version not compatible with the main software.	
E822		CAM FPGA version not compatible with main software.	Check the software version of the Viso X-ray unit.

Error code	Explanation		Comments
E835		Movement prevented due to missing jumper J8 on patient position control PCB or broken patient positioning cable.	
E836		Wrong C-arm PCB version for 120kV device.	
E841	Missing MCM	Missing MCM module 1.	
E842		Missing MCM module 2.	
E843		Missing MCM module 3.	
E844		Missing MCM module 4.	
E845		Missing MCM module 5.	
E846		Missing MCM module 6.	
E847		Missing MCM module 7.	
E848		Missing MCM module 8.	

3.6 Infrastructure errors (E9xx)

The following table lists the infrastructure errors.

Error code	Explanation		Comments
E901	Checksum error in	Checksum error in CPU application	
E905		Checksum error in tubehead EEPROM.	Check the cabling and the functionality of the FBK PCB.
E906		Checksum error in collimation calibration data	
E915		RTC RAM error.	The latest settings are not stored in memory. Check the RTC PCB and cabling.
E928	Program structure errors	PathSolver cannot solve trajectory.	Switch off the X-ray unit and move the arms closer to the patient support table.
E950		Diagnostic test timeouted.	
E960		CPU update failed	
E961		SW update failed	
E970		CPU reset occured due to CPU watch dog timer time out. Viso will be restarted.	
E971		Fpga watch dog timer time out occurred. Viso will be restarted.	

4 Annual maintenance

To guarantee user and patient safety and to ensure consistent image quality, the X-ray unit must be checked and recalibrated by a qualified Planmeca service technician once a year or after every 10 000 exposures if this is sooner.

Perform the following maintenance checks:

- Check the lubricant levels; for more information, see section "Lubrication" on page 53
- Upgrade Viso software if necessary; for more information, see section "Software update" on page 53

Perform the following checks and calibrations (in order listed below):

1. Filament calibration. See section "Calibrations" on page 32
2. Calibrations and QA tests performed with Device tool. See section "Calibrations with Device Tool program" on page 59.
3.

The following sections describe the annual maintenance tasks in more detail.

4.1 System maintenance

4.1.1 Cleaning

4.1.1.1 X-ray unit

For cleaning instructions, refer to the X-ray unit’s user’s manual.

4.1.1.2 Reco PC

Vacuum clean dust inside RecoPC case and clean the filters.

4.1.2 Labels

Check that no labels are detached or worn and that they are all legible. For more information on the labels and their positions, see section "Product labels" on page 15

4.1.3 Unit safety

4.1.3.1 Emergency stop button

Confirm that activating the emergency stop button will stop the X-ray unit operating. Pressing the emergency stop button should block all movements of the X-ray unit, disable radiation and produce a help message.

4.1.3.2 Exposure switch and indicators

The following sections describe the operating checks have to be performed on a regular basis.

Exposure warning signal

Confirm that the units buzzer comes on for the length of the exposure. The exposure switch also contains a buzzer. However, this buzzer can be disabled or enabled (from within the exposure switch assembly) depending

on local regulations. Check that this buzzer also comes on for the length of the exposure if it is enabled.

Exposure switch

Confirm that the exposure switch requires continuous activation to maintain the exposure. Releasing the exposure switch during the radiation should stop the exposure and produce an error message. Make a visual check and check for possible wear or damage of the exposure switch spiral. Replace if necessary.

Exposure indicators

Confirm that the exposure indicator lights turn on in the control panel and in the exposure switch for the length of the exposure. Additionally, check also the (optional) external exposure indicator, if the unit is equipped with such.

4.2 Electrical safety measurements

All the measurements shall be performed using an IEC62353-compliant measurement device. The unit shall be separated from the supply main (live, neutral and protective earth) during the measurements.

Protective earthing

For equipment with a non detachable power supply cord the impedance between the protective contact in the mains and any accessible metal part, which is protectively earthed, shall not exceed 300 mΩ.

Measurements shall be peformed using a measuring device able to deliver a current of at least 200 mA into 500 mΩ. The open circuit voltage shall not exeed 24 V.

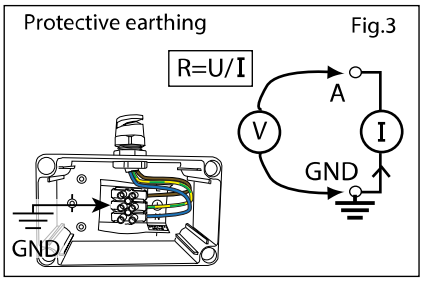

Measure between the main ground point and grounding point in C-arm and input module.

C-arm grounding point

Lift the cover slightly up so that you can reach the grounding point.

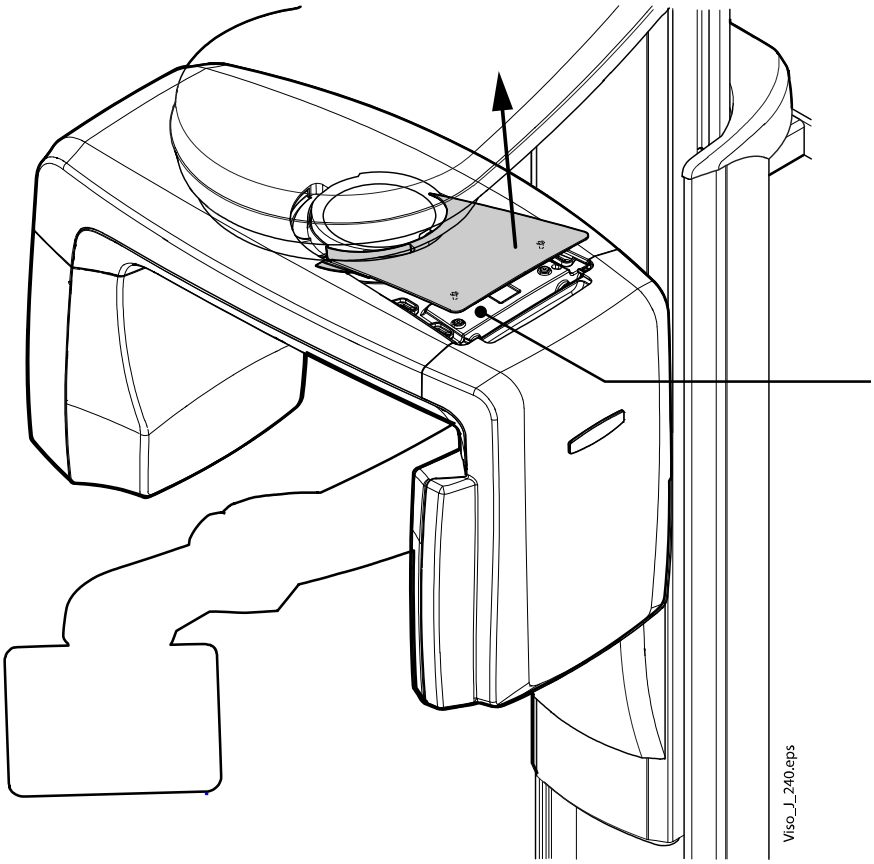

Input module grounding point

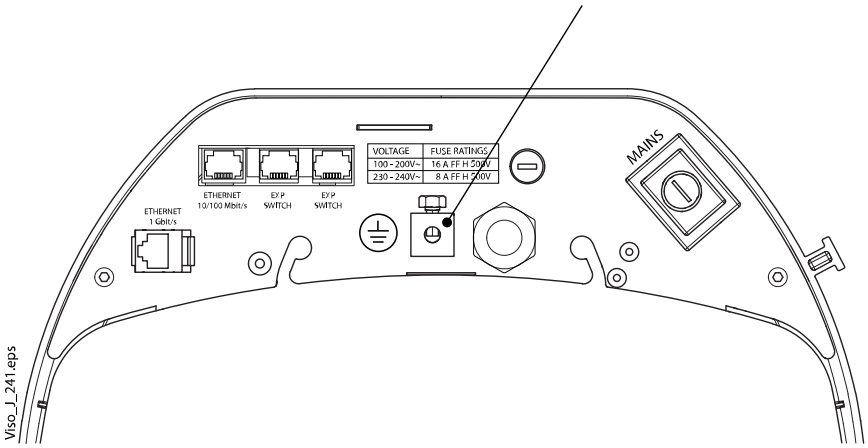

Continuous leakage current

Measurement from protective earth with MD.

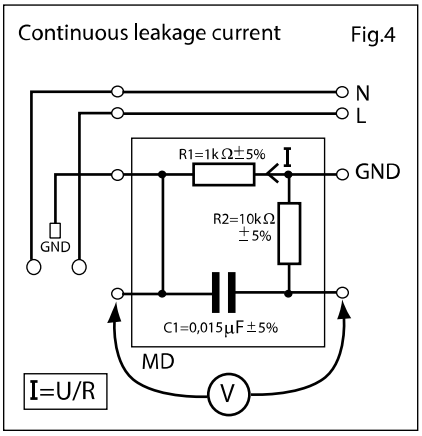

The electrical insulation providing protection against electric shock shall be of a quality that current flowing through it is limited to the specified values.

The specified limit value of the continuous earth leakage current is in normal condition (N.C) 0,5 mA tested in stand -by condition and in full operation with the mains in any position.

The continuous earth leakage current shall be measured from a protective earth conductor with a measuring device (MD).

Dielectric strength

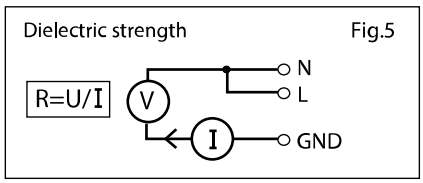

The dielectric strength shall be tested between live parts with accessible metal parts, which are protectively earthed , and the enclosure not protectively e arthed.

This insulation shall be basic insulation and the test voltage for measuring shall be 500 V for 1 min, when the equipment’s mains is connected off from the line.

During the measurement main switch of the MAINS PART shall be in operating position (ON), to include, as far as it is practicable , all insulations of the MAINS PART during measurement.

During the test, no flashover or breakdown shall occur and the insulation resistance should be least 2 MΩ.

4.3 Mechanical checks

4.3.1 Column motor nut

Regularly check if the lift column safety nut is active.

The column motor is equipped with double motor nut assembly consisting of lower, solid nut (primary), and upper, floating nut (secondary). In case the primary nut fails, the secondary nut becomes active. The visual check of the column motor nut assembly must be performed once a year as follows.

Remove the column rear cover as described in section "Removing column covers" on page 131. Switch the unit off.

The column motor nut assembly is attached to the fixed column and can be seen from the opening on the fixed column top. Check whether the lug of the indicator sheet is bent and the top surface of the secondary motor nut is level with the edge of the column nut frame, or a little higher.

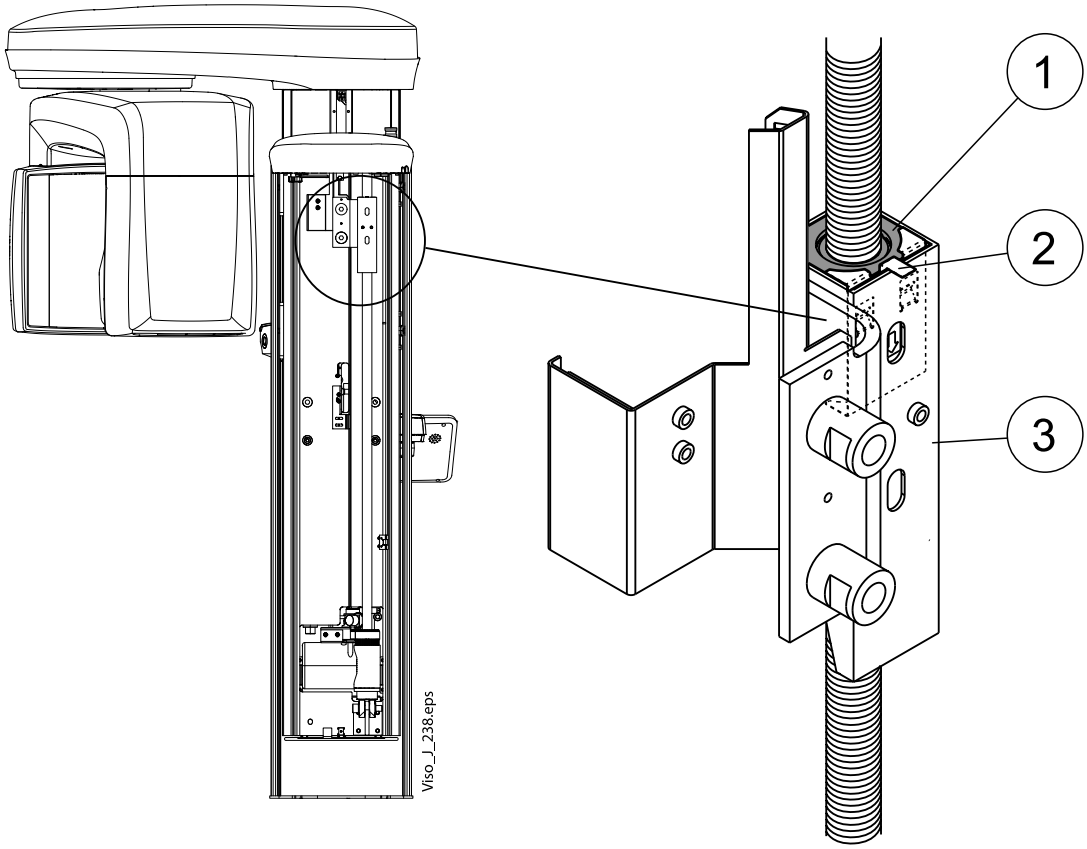

1. Upper motor nut	2. Lug of the indicator sheet	3. Column nut frame

If the secondary nut is clearly inside the column nut frame and the lug of the indicator sheet is straightened, the column motor nut assembly must be replaced.

4.3.2 Lubrication

Visually check for the amount of lubricant in the linear actuator and threaded rods of the linear actuator and collimator.

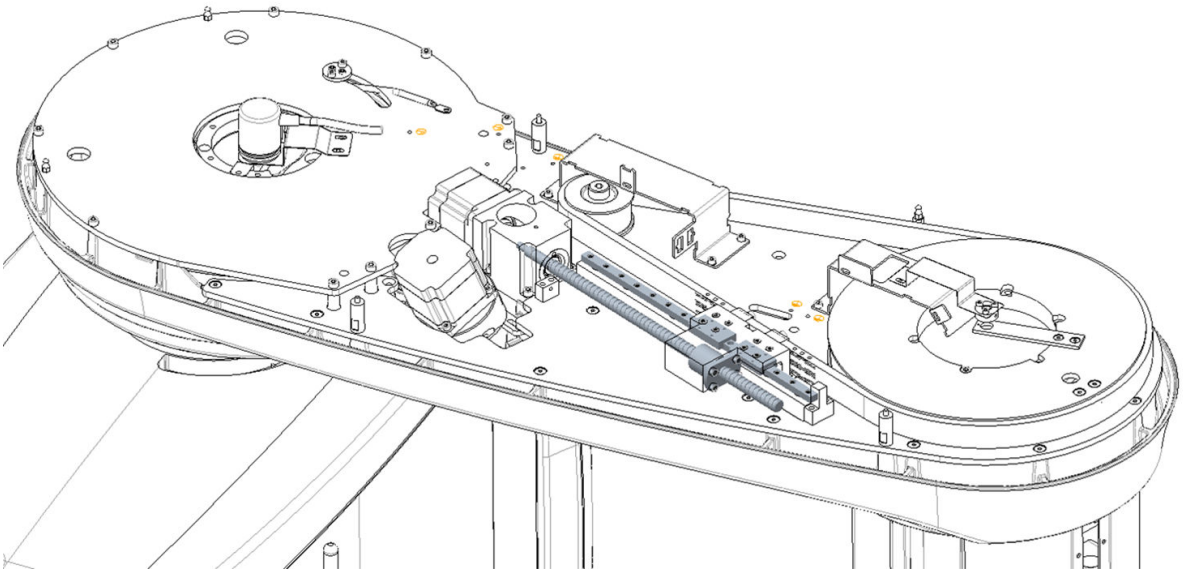

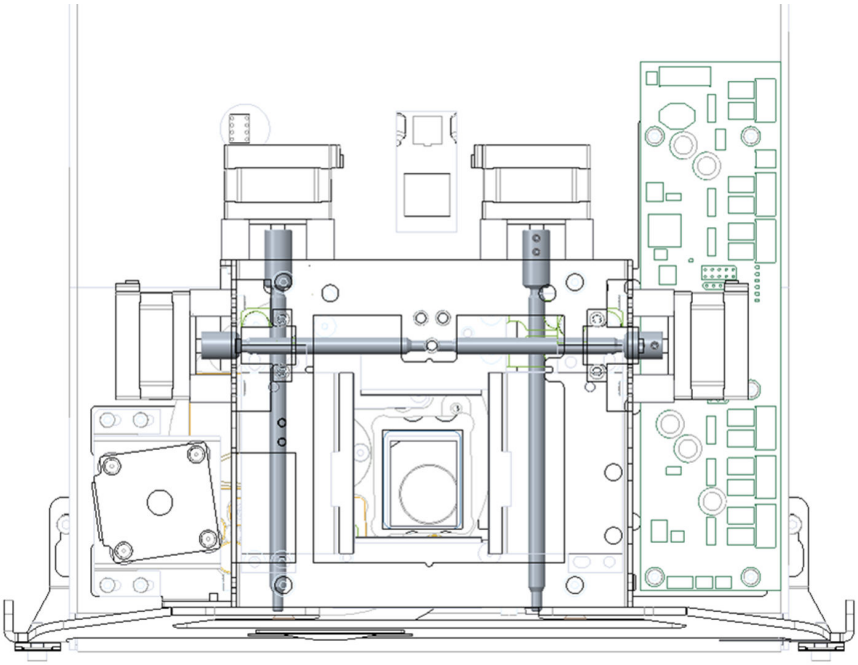

If necessary, lubricate the parts with Shell Gadus S3 A1300C 2 grease, or a grease with the same specifications as Shell Gadus S3.

After lubrication, wipe away the excess lubricant.

4.4 Software update

Perform software update according to the instructions provided by the software update Wizard.

4.5 X-ray measurements and exposure values

There are two ways of doing most of the following tests:

- From the radiation beam

- From the unit's feedback signals

Both methods are presented here.

NOTE

Not all tests can be performed both ways. Radiation is emitted during all these tests. Proper protective measures against unnecessary exposure to radiation must be observed.

4.5.1 Non-invasive testing

This method can be used for checking the kVp, radiation quality (half-value layer) and the exposure time.

Peak tube potential (kVp) measurement

When a radiation measurement device is used for kVp measurement, the following things should be noted:

1. The sensor should be placed exactly in the middle of the X-ray field in both horizontal and vertical directions (very important especially if the measurements are made in the panoramic mode!), use a fluorescent screen to determine the X-ray field area if you are not sure about it.
2. The sensor distance from the focal spot should be as short as possible to maximise the signal / noise ratio.
3. The whole sensor area must be within the radiation field.
4. The meter must be properly calibrated and, when necessary, appropriate calibration/correction factors must be used when interpreting the results.

The measured kVp must be within ±5% of the value displayed on the user interface.

Half-value layer measurement

Measure the air kerma rate again and check that the air kerma rate with additional 2.5mm Al is more than one half of the one measured without the added material. That is:

(Dose rate with added 3 mm Al eq filtration) / (Dose rate without added filtration) > 0.5

Depending on the type of the radiation meter used, it is possible that a correction factor needs to be applied to the result measured with added material in the radiation field.

Exposure time measurement

Attach the radiation measurement device to the front panel of the sensor and make sure its whole area is in the radiation field. The measured exposure time must be within ±10% of the exposure time displayed in the user interface.

4.5.2 Direct-from-unit-signals testing

NOTE

The manufacturer does not require this testing. Only perform the test if the local authorities require it.

An invasive method should be used for checking the tube current (mA), and can be used for checking the kVp and exposure time. This method requires

that the covers around the tube head assembly are removed, and a special measurement adapter cable, Planmeca order code 10008320, is connected to the connector J2 in the FBK PCB. The FBK PCB is permanently fastened to the front side of the tube head assembly. The analog feedback voltage signals can be measured with a calibrated multimeter from the adapter cable connectors (labelled kVpos, kVneg, mApos and mAneg). An oscilloscope is required if kV and mA waveforms need to be observed, for an example when determining the exposure time.

NOTE

The feedback signals are differential, so measuring only one polarity signal (e.g. kVpos with respect to the X-ray units ground potential) will give false results. The feedback signals must always be measured differentially, kV feedback voltage = (kVpos – kVneg) and mA feedback voltage = (mApos – mAneg).

4.5.2.1 Peak tube potential (kVp) measurement

Connect the kVpos plug of the Planmeca measurement adapter to the positive terminal of the multimeter and the kVneg plug to the negative (ground) terminal of the multimeter.

Select the appropriate DC voltage measurement range for 1 to 5 V signal level. Take an exposure with desired kV setting (selected mA value has no effect, however low mA should be used to minimise the amount of unnecessary radiation) and when the voltage reading has stabilized, record it. The actual tube voltage relates to the measured feedback signal as follows:

Actual tube voltage = 27 000 * measured feedback voltage (in volts)

The resulting tube voltage should be within ±5% of the voltage indicated in the user interface.

4.5.2.2 Tube current (mA) measurement

Connect the mApos plug of the Planmeca measurement adapter to the positive terminal of the multimeter and the mAneg plug to the negative (ground) terminal of the multimeter. Select the appropriate DC voltage measurement range for 100mV to 5 V signal levels. Take an exposure with desired mA setting (selected kV value has no effect, but lowest possible kV is recommended to minimise the amount of unnecessary radiation) and when the voltage reading has stabilized, record it. The actual tube current relates to the measured feedback signal as follows:

Actual tube current (in mA) = 5.06 * measured feedback voltage (in volts)

The resulting tube current should be within ±10% of the current indicated in the user interface.

4.5.2.3 Exposure time measurement

A calibrated oscilloscope is needed for invasive exposure time measurement. Connect oscilloscope channel 1 to kVpos, channel 2 to kVneg and oscilloscope ground to the tube head ground. Select differential signal (Ch1 – Ch2) from the oscilloscope math menu and take an exposure with desired values. The exposure time can be defined from the oscilloscope screen as the time interval during which the tube potential exceeds 70% of the peak tube potential. The exposure time must be within ±10% of the value displayed in the user interface.

4.5.2.4 Half-value layer measurement

There are different recommended procedures for measuring the HVL. The HVL is defined as the thickness of a specified material (generally expressed in mm Al) which attenuates x-radiation with a particular spectrum to an extent such that the value of air kerma (or exposure or absorbed dose) rate is reduced to one half of the value that is measured without the material.

The simplest method to ensure that the unit complies with the requirement (120 kV HVL on 4.3mm Al) is to measure the air kerma rate first without any additional material in the radiation field, then add 4.3 mm Al to the radiation field, measure the air kerma rate again and check that the air kerma rate with additional 4.3 mm Al is more than one half of the one measured without the added material. That is:

(Dose rate with added 4.3 mm Al eq filtration) / (Dose rate without added filtration) > 0.5

This is sufficient to ensure that the HVL is at least 4.3 mm Al. Depending on the type of the radiation meter used, it is possible that a correction factor needs to be applied to the result measured with added material in the radiation field.

5 Adjustments and calibrations

5.1 Adjustment procedures

The following sections list and describe the procedures for adjusting the X-ray beam, patient positioning mechanisms and columns.

After installing the X-ray unit perform the following checks and adjustments:

1. Take a ball phantom exposure. Refer to section "Ball phantom exposure" on page 57.
2. Perform the Device tool calibrations. Refer to section "Calibrations with Device Tool program" on page 59.

5.2 Ball phantom exposure

To check the panoramic X-ray beam and the patient positioning mechanism adjustments, carry out a ball phantom test using Planmeca Romexis.

1. Attach the ball phantom to the patient support base. The ball phantom is included in the X-ray unit delivery. Ensure that the phantom is tightly attached to the patient support base.
2. In Planmeca Viso, select panoramic program. Set image layer to 0 mm and set the exposure values to 60 kV and 16 mAs.
3. In Planmeca Romexis, select 2D imaging -> Panoramic Exposure. When the Waiting for Exposure window appears, press the X-ray unit's exposure button.

CAUTION

Radiation is generated when the exposure button is pressed. Take adequate protection measures.

After the exposure, the image displays in Planmeca Romexis. Select the SmartPan layer 5/10.

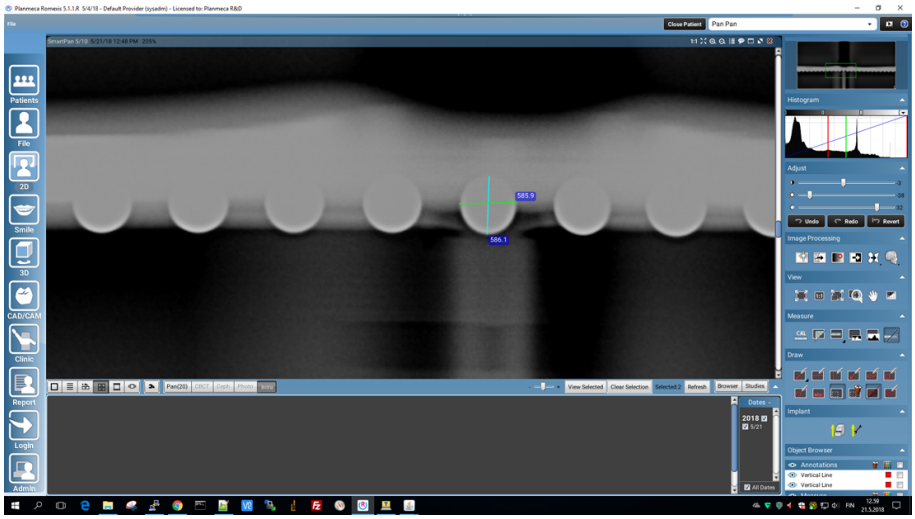

Using the Draw and Measure tools, calculate the ball roundness. For information on using the Planmeca Romexis Draw and Measure tools, see the Planmeca Romexis user's manual, publication number 10014593.

Measure the difference between the front-most ball's width and height. The ratio in ball height and width must ≥ 0.95.

If the ratio is less than 0.95, adjust the patient support base position as follows.

1. Unscrew the cover attachment screws **(1)** and **(2)** and remove the cover **(3)**.

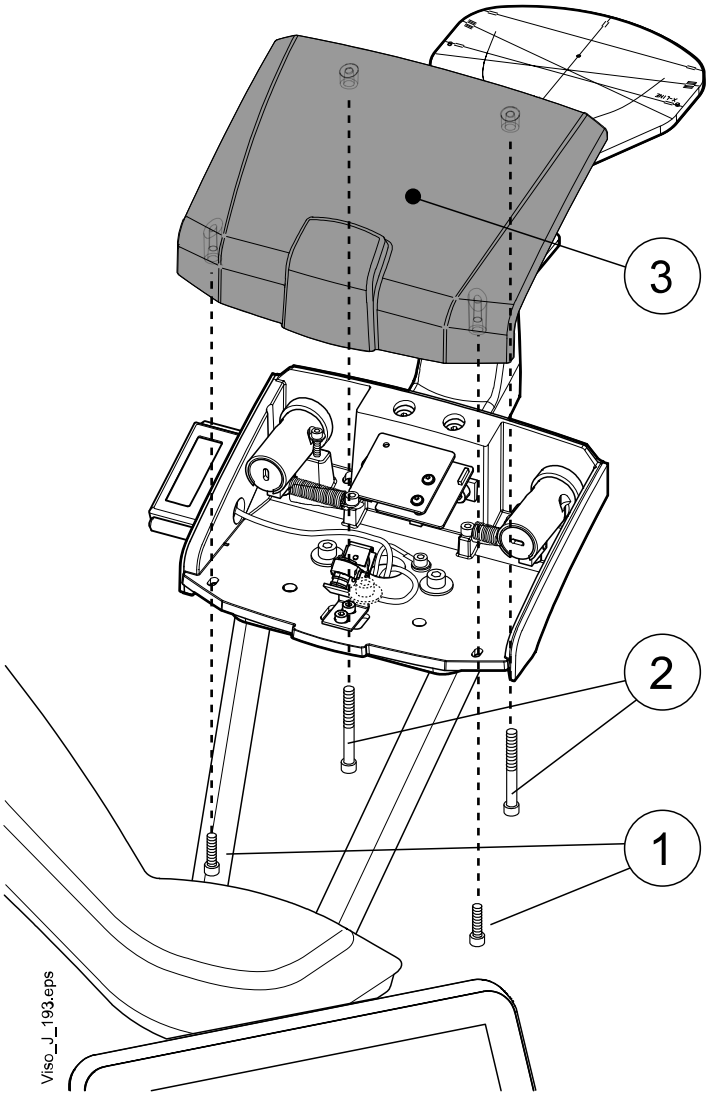

2. Loosen three patient support base attachment screws (1) and adjust the base backwards/forwards (2). If the front-ball's height is smaller than width, move the base forwards and vice versa. Tighten the attachment screws.

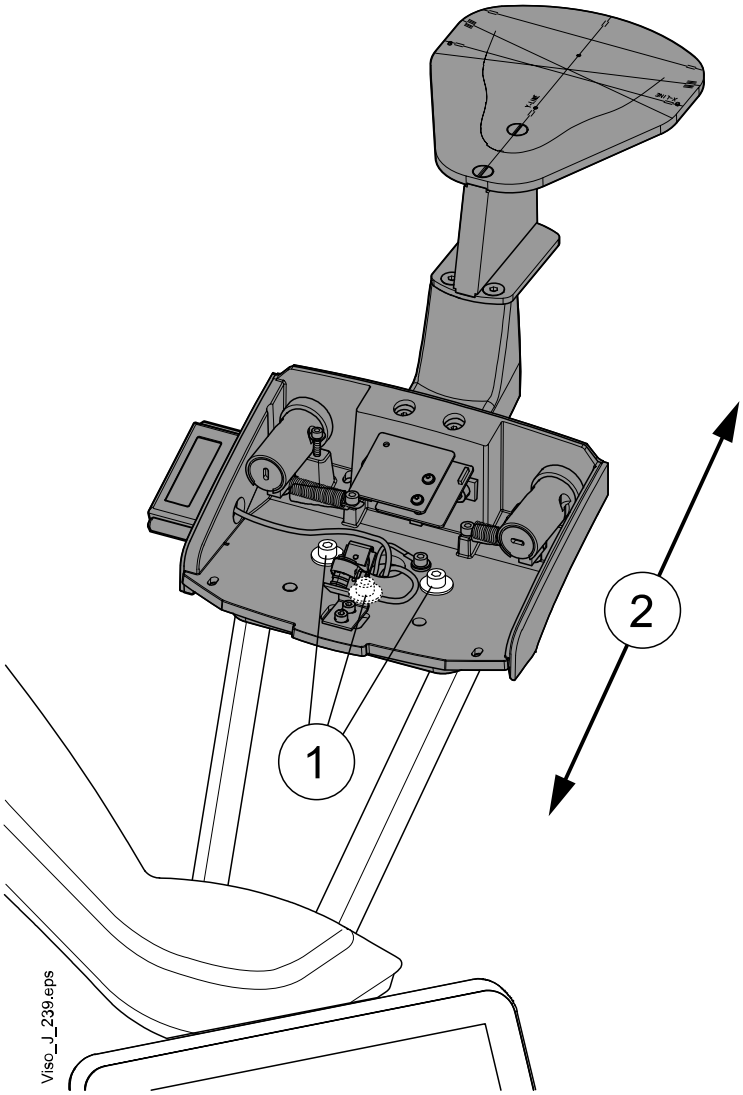

5.3 Calibrations with Device Tool program

5.3.1 General

Introduction

With Planmeca **Device Tool** program, it is possible to perform the following tasks:

- Update Planmeca Viso system software
- Calibrate Planmeca Viso X-ray unit
- Carry out 3D quality assurance (Q/A) tests
- Configure Network Settings

NOTE

The calibrations should be performed by qualified service technician only.

NOTE

Update the software before performing the calibrations and Q/A tests.

NOTE

The display values shown in this manual are only examples and should not be interpreted as recommended values unless otherwise stated.

Start the **Device Tool** and click **Viso** button.

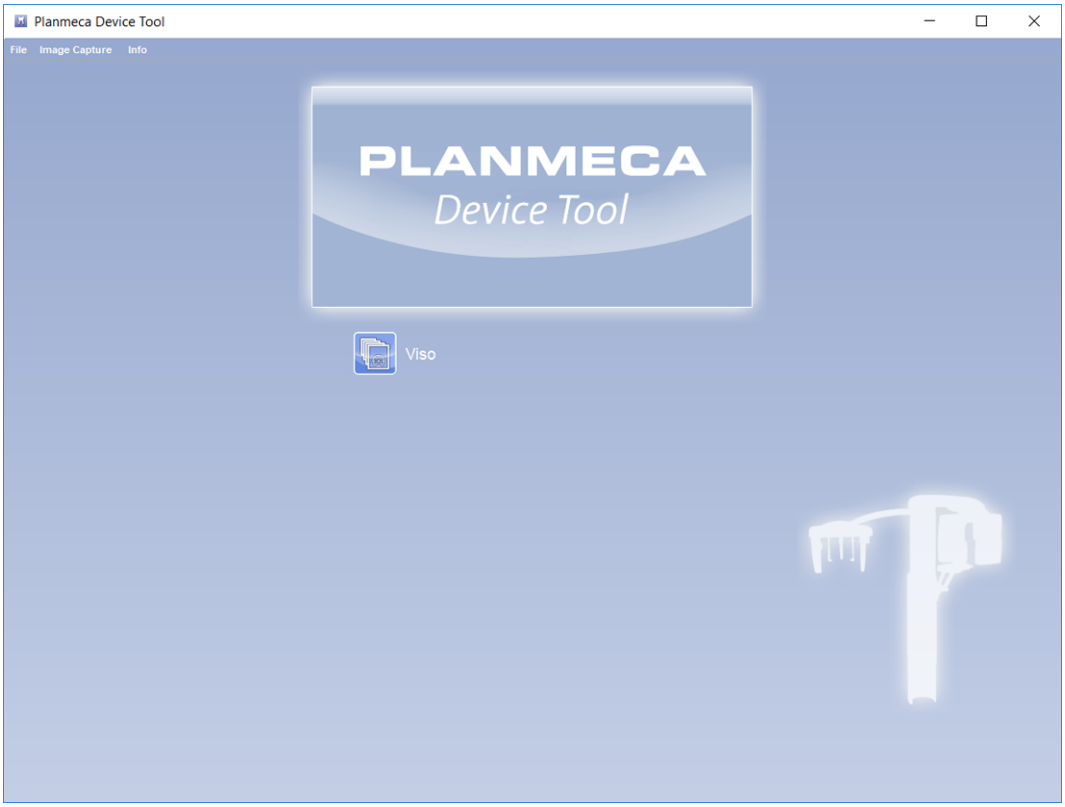

The following window appears. The Device Tool automatically interrogates the system configuration. All devices that are online are shown and all the connection icons should be green. These devices must be seen on the window: Viso, Grabber_V2 (i.e. sensor) ja Reco PC. If the connection icon displays as red make sure that the devices are switched on, the IP is correct and that all cables are connected correctly.

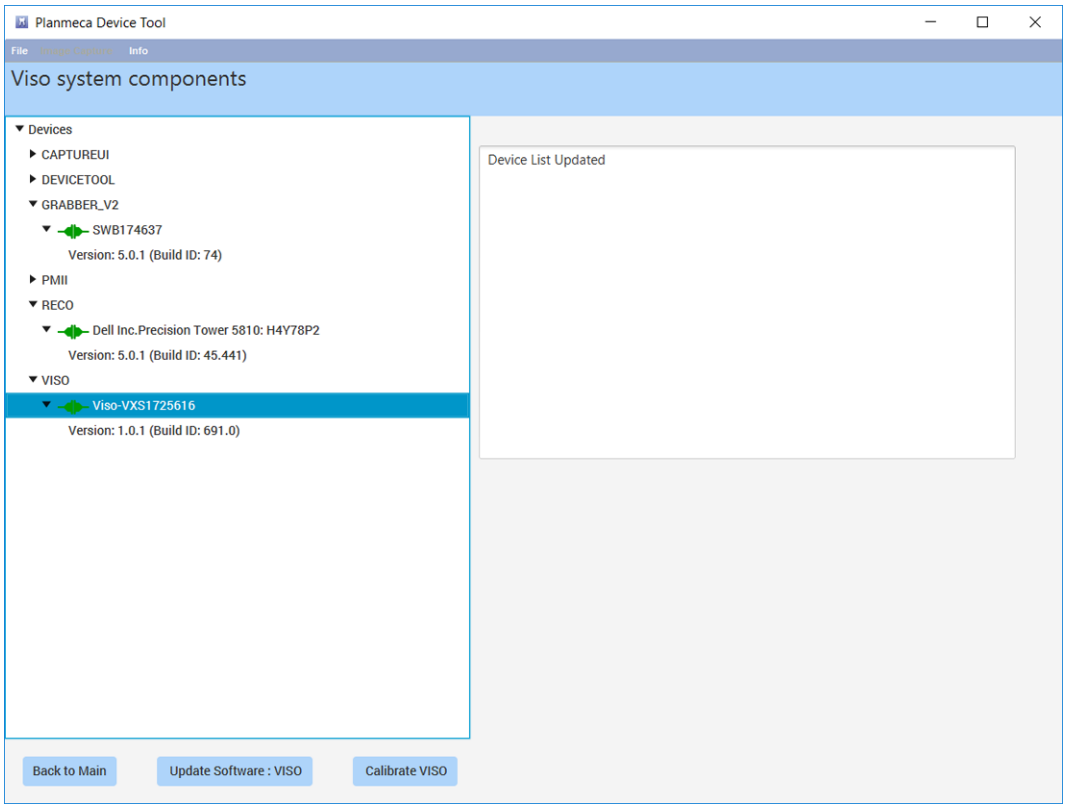

Device explanation:

CAPTUREUI – Romexis imaging user interface

DEVICETOOL – Other Device tool (i.e. not this one)

GRABBER_V2 – Viso sensor

PMII – Romexis imaging commincation

RECO – Reconstruction PC
VISO – Viso X-ray unit

Click the Viso device from the list of devices and then click **Calibrate Viso**. The following window appears. You can now select the calibrations by clicking the dropdown menu symbol on the upper left corner.

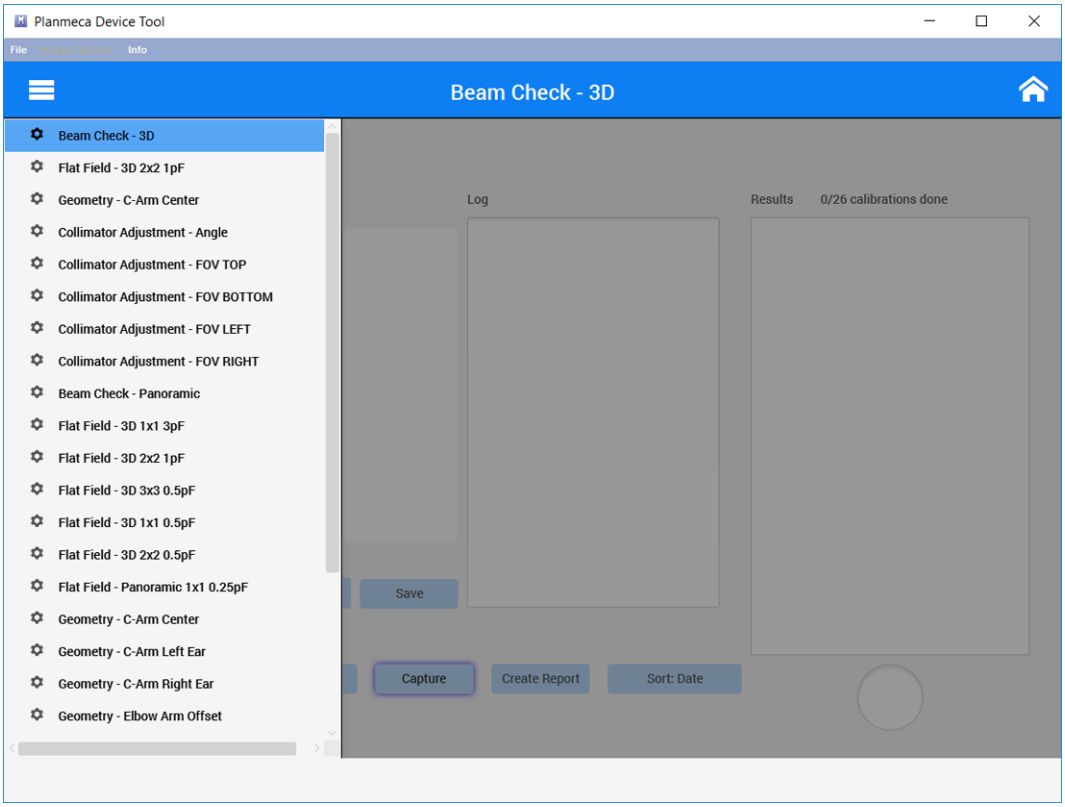

Calibration windows

An example of the calibration window:

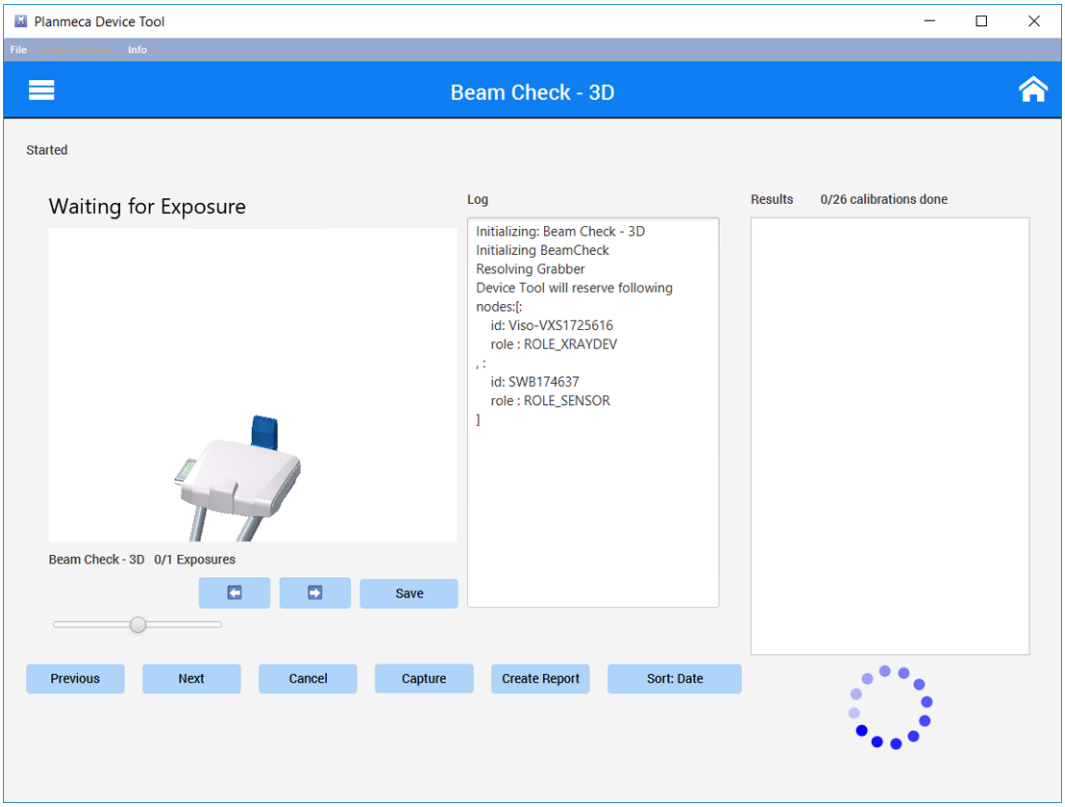

Dropdown menu: The calibrations can be selected from the dropdown menu symbol on the upper left corner. The calibrations are listed in the order they should be performed.

Preview: When the calibration is selected, the calibration setup is shown on the window. After the exposure the image from the exposure is shown on this window. You can scroll the images with the arrow buttons located below the window. The image can be saved with **Save** button.

Log: The Log window shows information about the progress of the calibration.

Results: The calibration results are listed on this window.

By clicking **Previous** you will move to the previous calibration.

By clicking **Next** button you will move to the next calibration.

By clicking **Cancel** you can interrupt the calibration.

By clicking **Capture** you can take the same calibration again.

By selecting **Create Report** the report opens in your web browser.

The Results can be sorted by with the **Sort** button. Sorting can be done by date or by category.

Purpose of calibrations

Beam check

The beam check is done to check that the collimation is correctly adjusted in order to target the beam to the desired area.

Flat Field calibration

The flat field calibration is done to detect the radiation source form and intensity at the sensor plane, to detect sensor pixel response for the radiation source and to detect pixel behaviour variations at the given imaging conditions to produce applicable X-ray image.

Geometry calibration

The geometry calibration is done to calculate and optimize the X-ray units geometry in the imaging environment.

Collimator adjustments

The collimator angle adjustments are done to measure the straightness of collimating blades compared to the sensor and to inform if mechanical adjustments are needed.

The individual collimator blade (left, right, top, bottom) calibrations are done to inform X-ray unit where the X-rays are limited at sensor plane in different blade positions to enable X-ray unit to drive collimation accordingly with selected imaging settings and volume size.

Camera calibrations

The calibrations are done to calibrate the camera system for optimal image, to set the colour balance of the cameras and to calculate camera positions and geometry in the imaging system.

5.3.2 Checking adjustments

The collimator mechanical adjustments must be checked before performing the Device tool calibrations.

Beam check 3D

1. Start the **Device Tool** and click **Viso** button.
2. Click the Viso device from the list of devices and then click **Calibrate Viso**.
3. Click the dropdown menu symbol on the upper left corner on the window that appears.
4. Select **Beam Check - 3D** from the list.

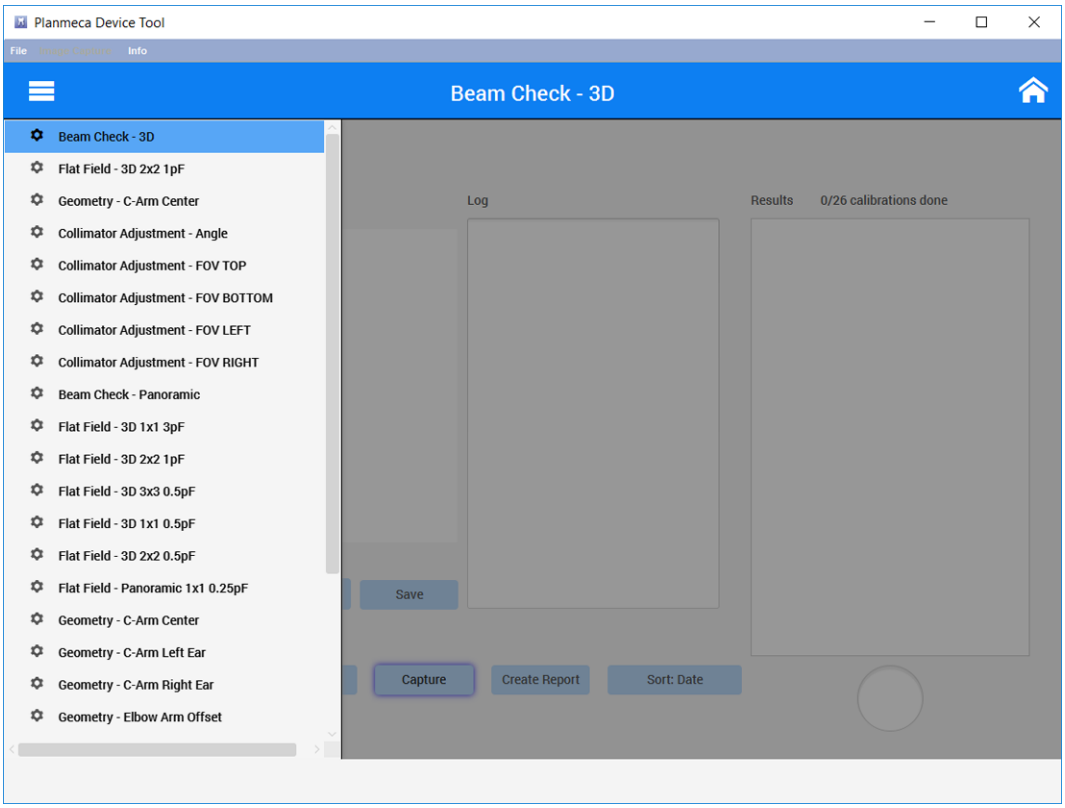

5. The following window appears.

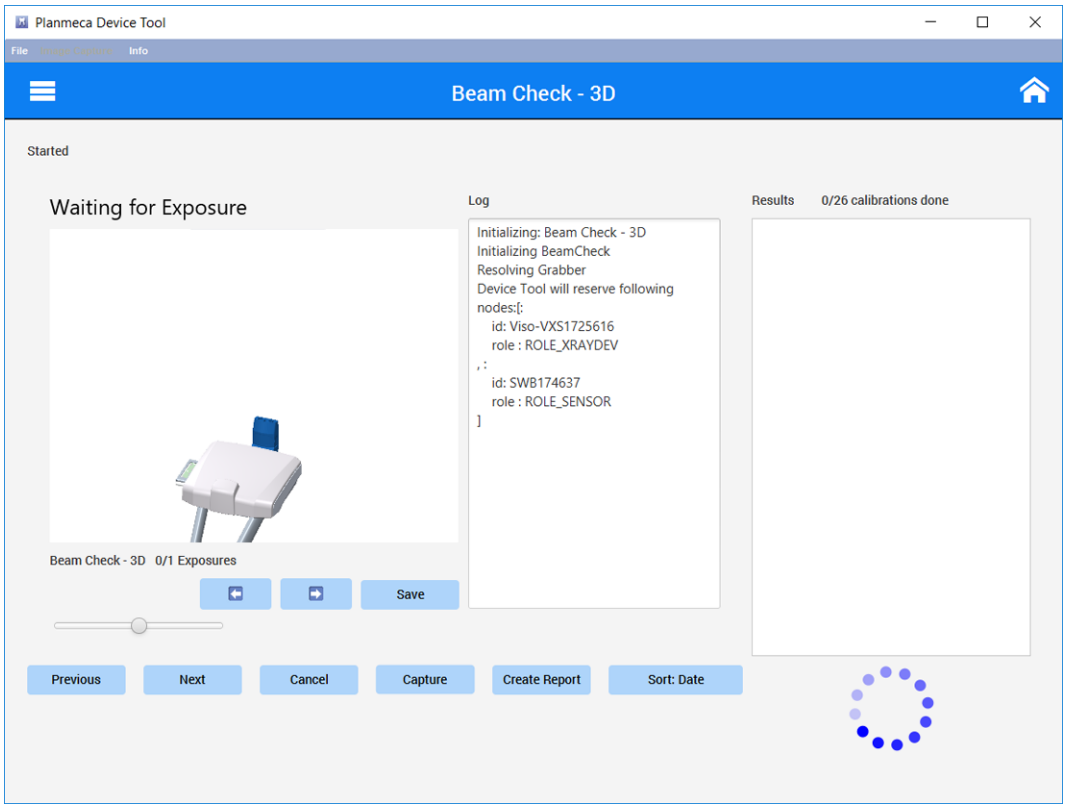

6. Protect yourself from radiation and press the exposure button to take the exposure. The beam check exposure results will appear in the window.

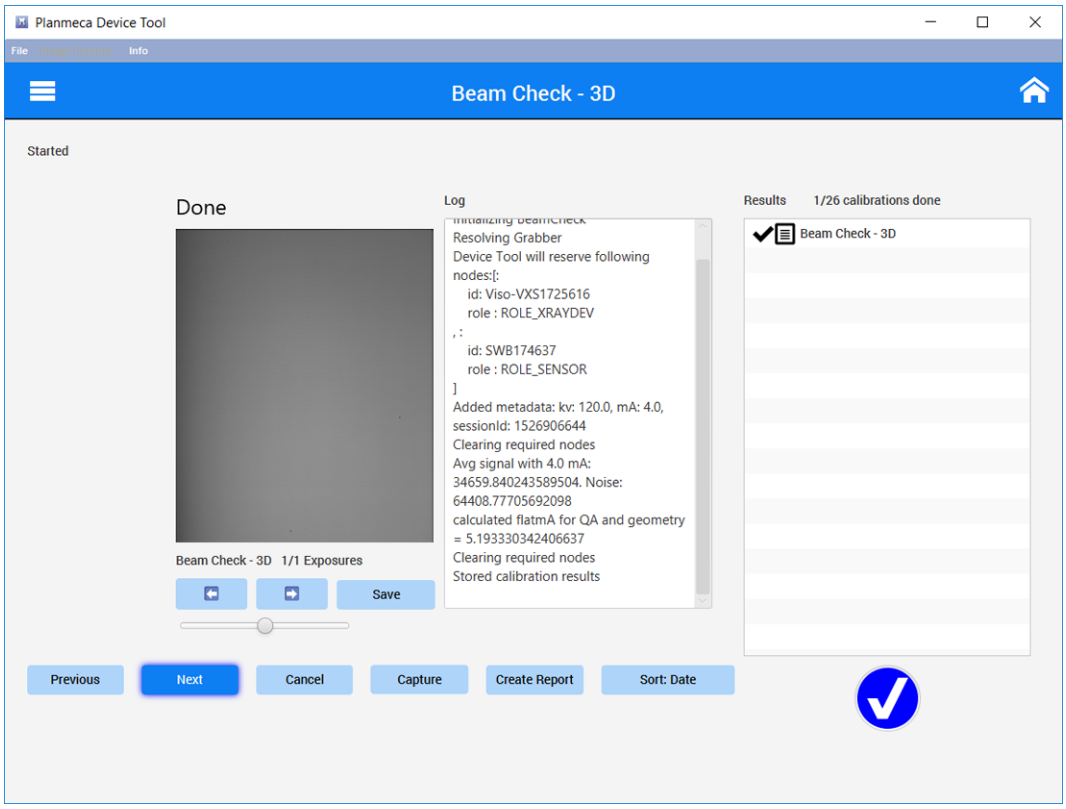

7. After successful beam check exposure perform the Flat field **2x2 1pF** calibration.

Flat field 3D calibration with 2x2 1 pF binning

1. Click **Next** on the Beam check - 3D window. The system will move to the **Flat field - 3D 2x2 1pF** calibration.
2. Protect yourself from radiation and press the exposure button to take the exposure. The Flat field exposure results will appear in the window.

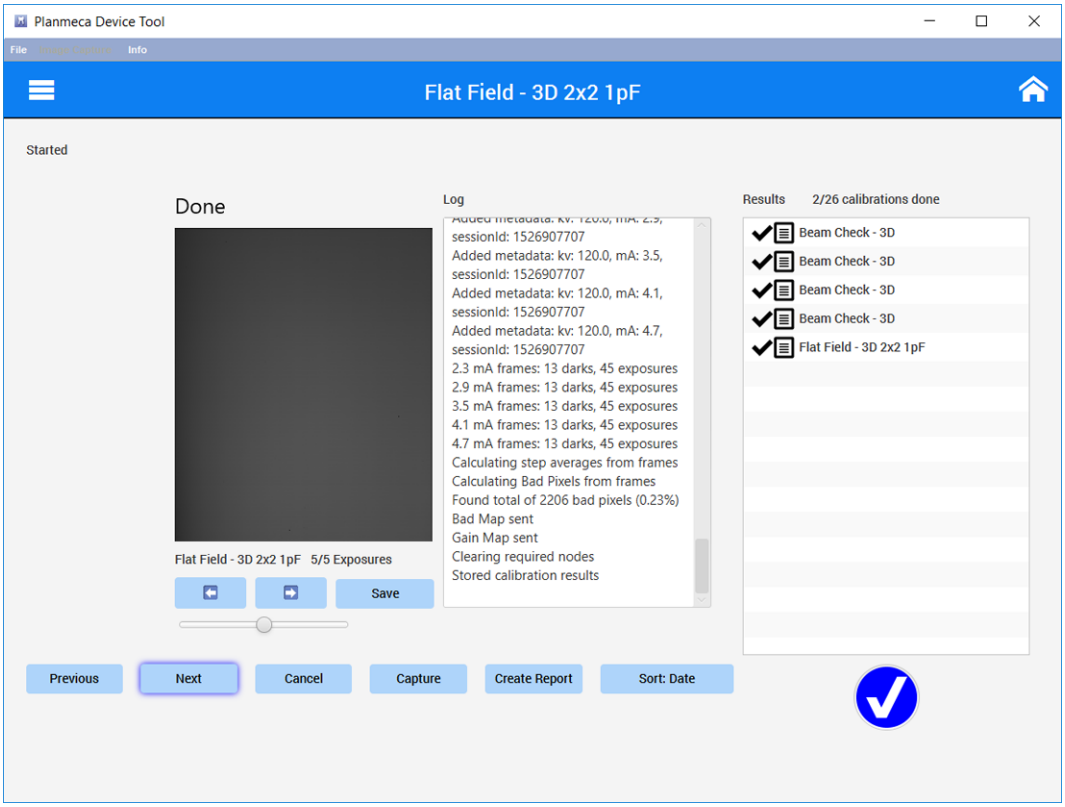

3. After successful calibration perform **Geometry - C-arm center** calibration.

Geometry - C-arm center

Geometry calibration determines the axis of rotation necessary to adjust and straighten the sensor. Calibration is performed using the geometry phantom.

1. Attach the geometry calibration platform to the adapter on the patient support base. Make sure that the platform is horizontal. If the geometry calibration platform is not horzintal, adjust its position with the screws located below the platform.

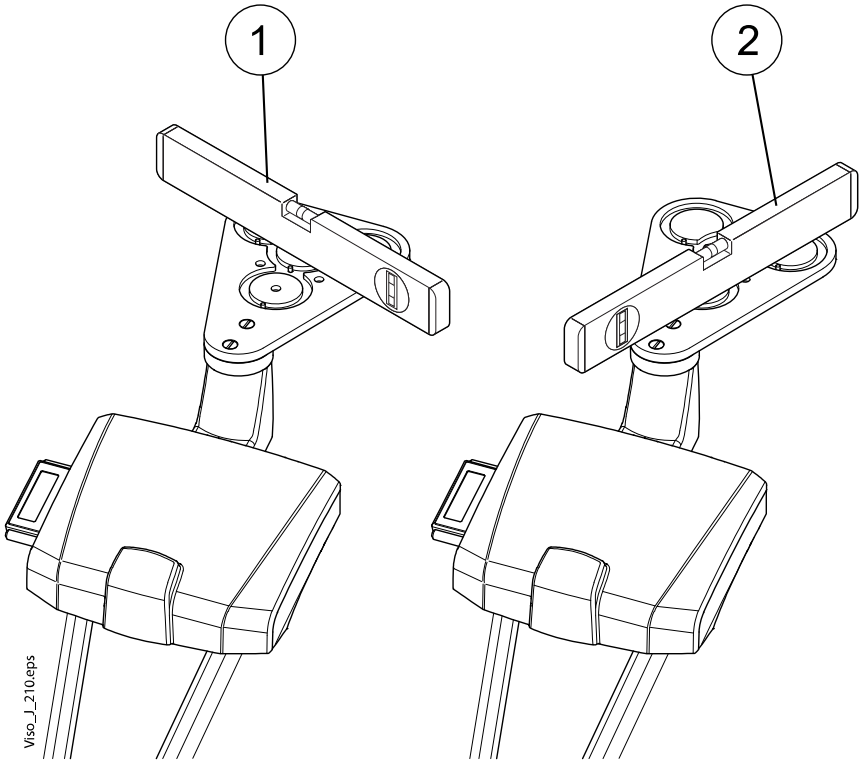

2. Attach the geometry calibration platform to the adapter on the patient support base. Position the geometry phantom to the calibration platform front position.

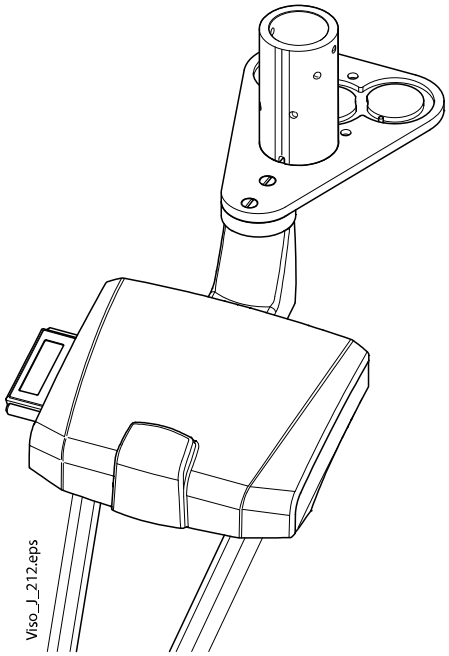

3. Click **Next** on the Flat field calibration window. The system will move to the **Geometry - C-arm center** calibration. The correct position of the geometry phantom is shown on the Preview window.

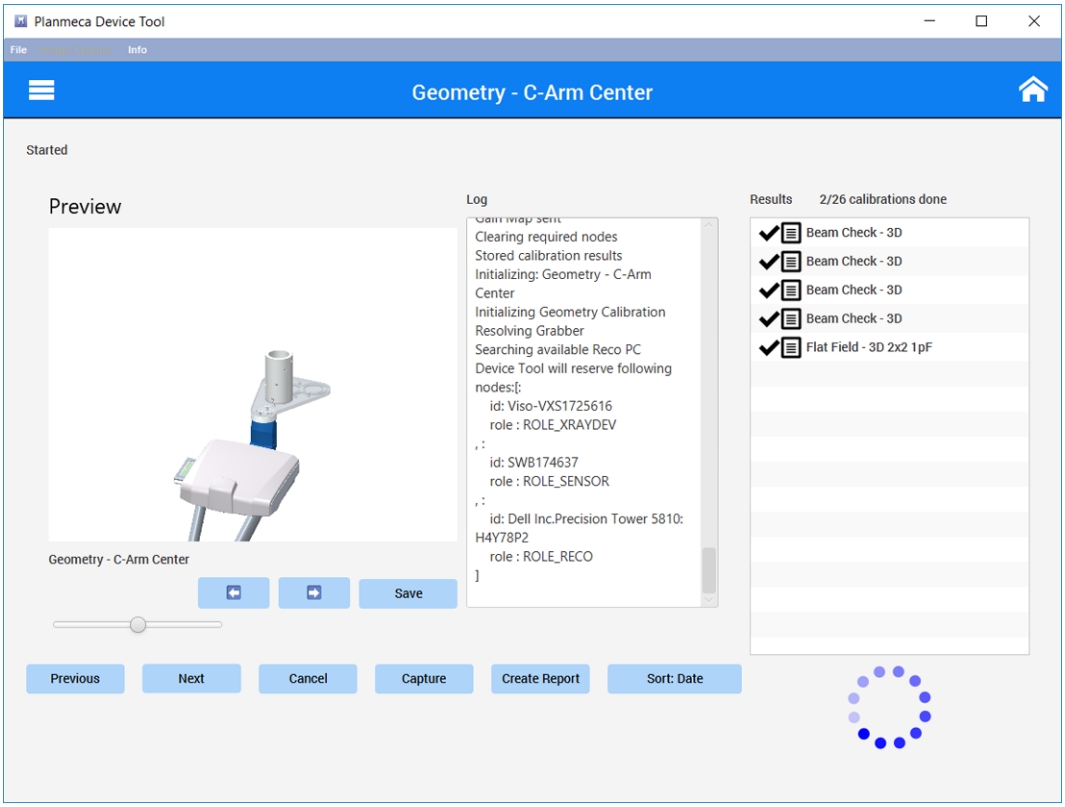

4. Protect yourself from radiation and press the exposure button to take the exposure. The Geometry calibration exposure results will appear in the window.

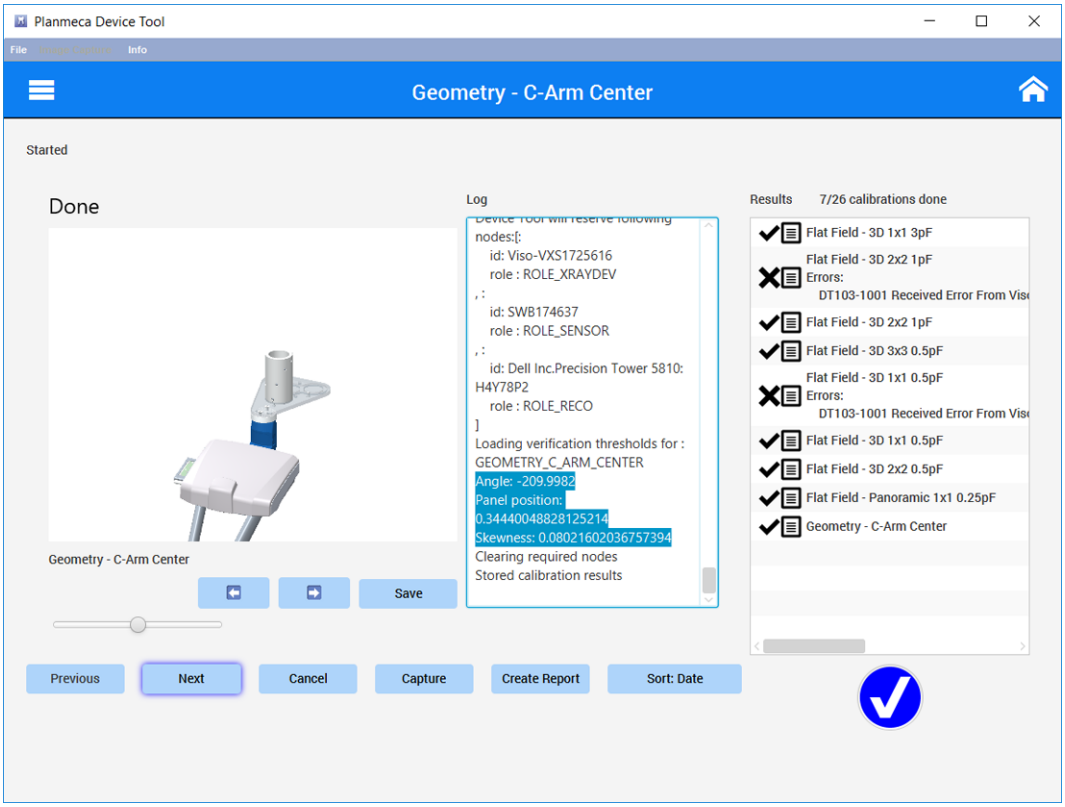

5. Acceptable **angle value** is -210.0 ± 0.1 degrees. The calibration is not successful when the scan angle is outside the accepted range. In this case you have to adjust the C-arm rotation movement. Refer to section "Adjusting C-arm rotation movement" on page 90.
6. Acceptable skewness value is ± 0.15 degrees and panel position value ± 0.5 mm. If the values are not acceptable, adjust the sensor assembly position. Refer to section "Sensor assembly adjustment" on page 88.
7. After successful calibration perform **Collimator adjustment - Angle** calibration.

Collimator adjustment - Angle

1. Remove the geometry calibration platform and geometry phantom from the patient support base.
2. Click **Next** on the Geometry calibration window. The system will move to the **Collimator adjustment - Angle** calibration.

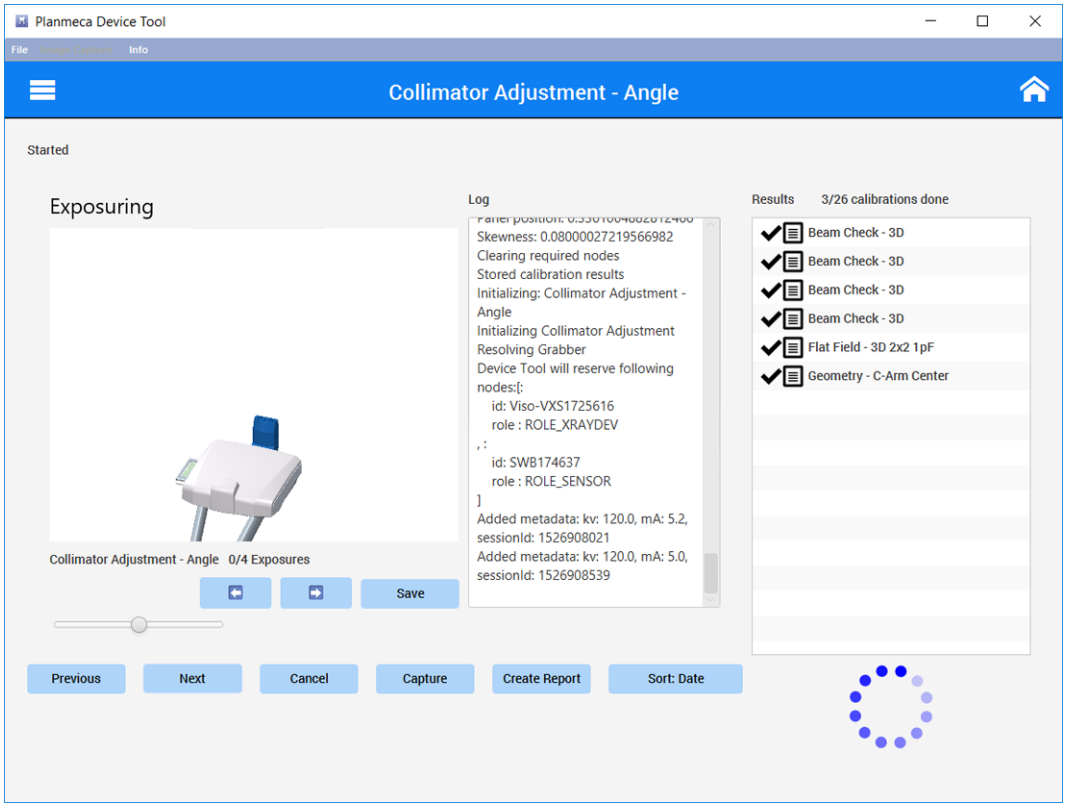

3. Protect yourself from radiation and press the exposure button to take the exposure. The Collimator adjustment - angle exposure results will appear in the window.

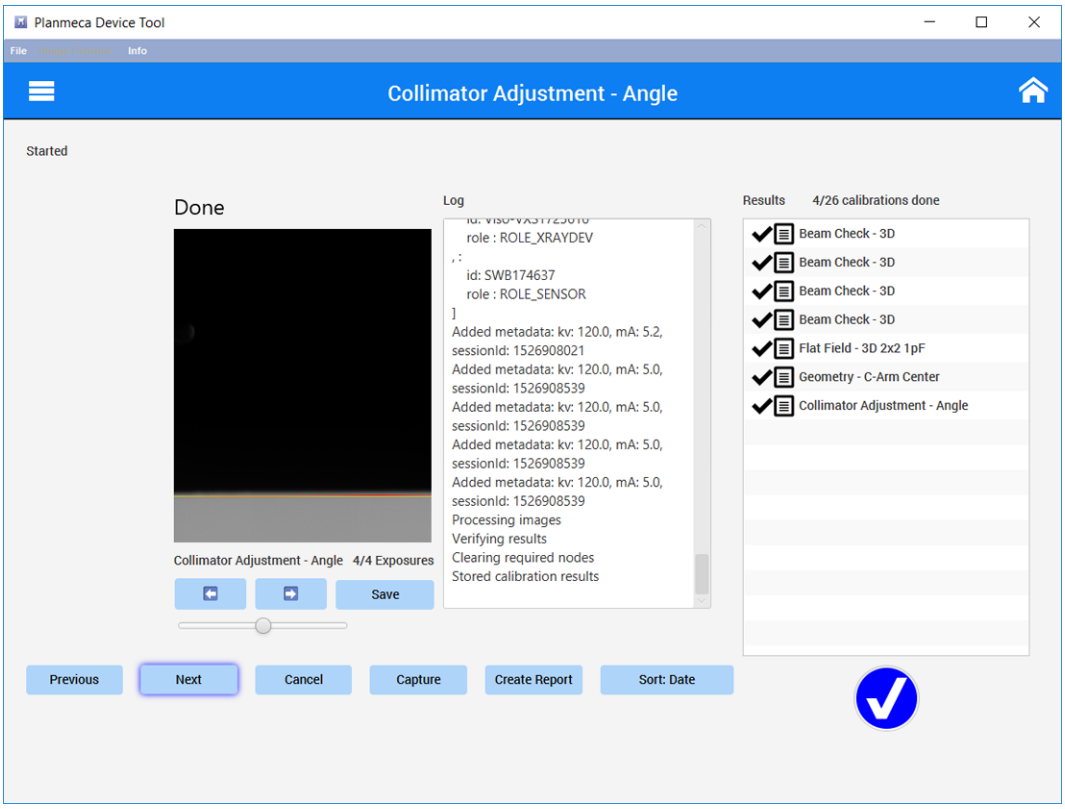

4. If the calibration failed adjust the beam position as described in section "Collimator adjustment" on page 88.

When all these calibrations are passed, perform the Device tool calibrations in order explained in section "Other calibrations" on page 70.

5.3.3 Other calibrations

After the collimator check and adjustment the rest of the Device tool calibrations must be performed in the order described in this section.

5.3.3.1 Collimator calibration

1. Click Next on the **Collimator adjustment - Angle** window. The system will move to **Collimator adjustment - FOV TOP** calibration.

2. Protect yourself from radiation and press the exposure button to take the exposure. The exposure results will appear in the window.

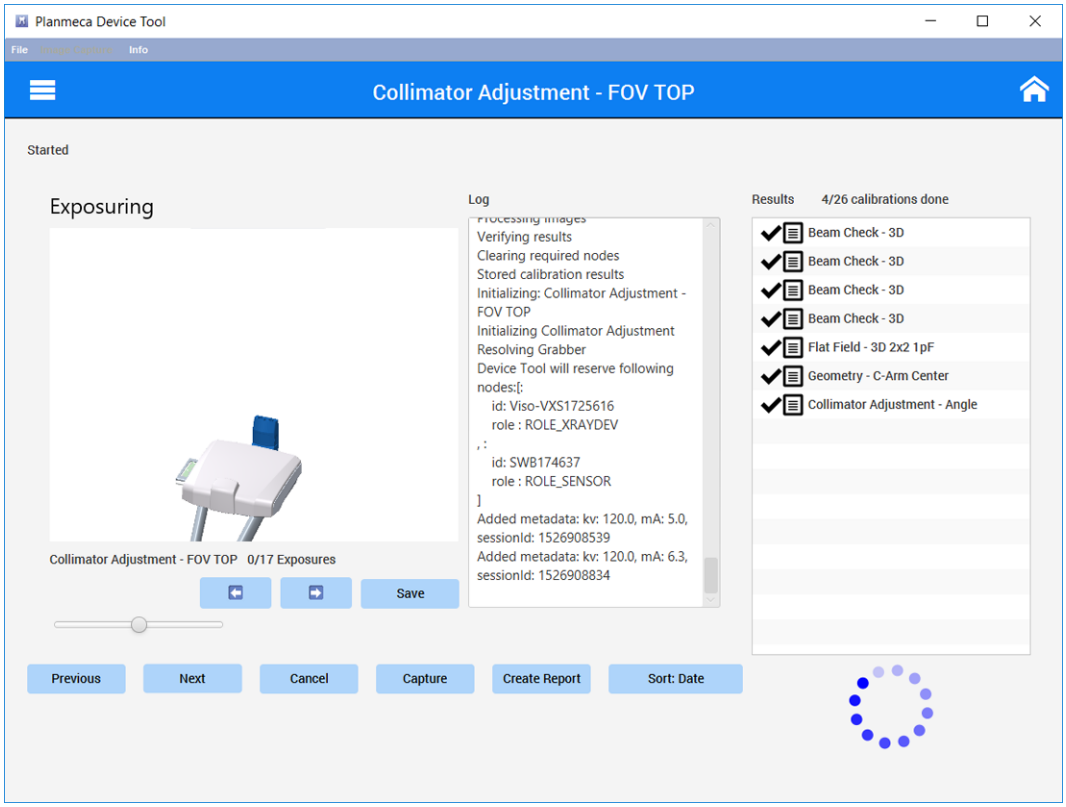

3. Perform the **Collimator adjustment - FOV BOTTOM, LEFT and RIGHT** calibrations.

5.3.3.2 Flat field 3D calibration

1. Click Next on the **Collimator adjustment - FOV RIGHT** window. The system will move to **Flat field 3D 1x1 3pF**calibration.

2. Protect yourself from radiation and press the exposure button to take the exposure. The Geometry calibration esposure results will appear in the window.

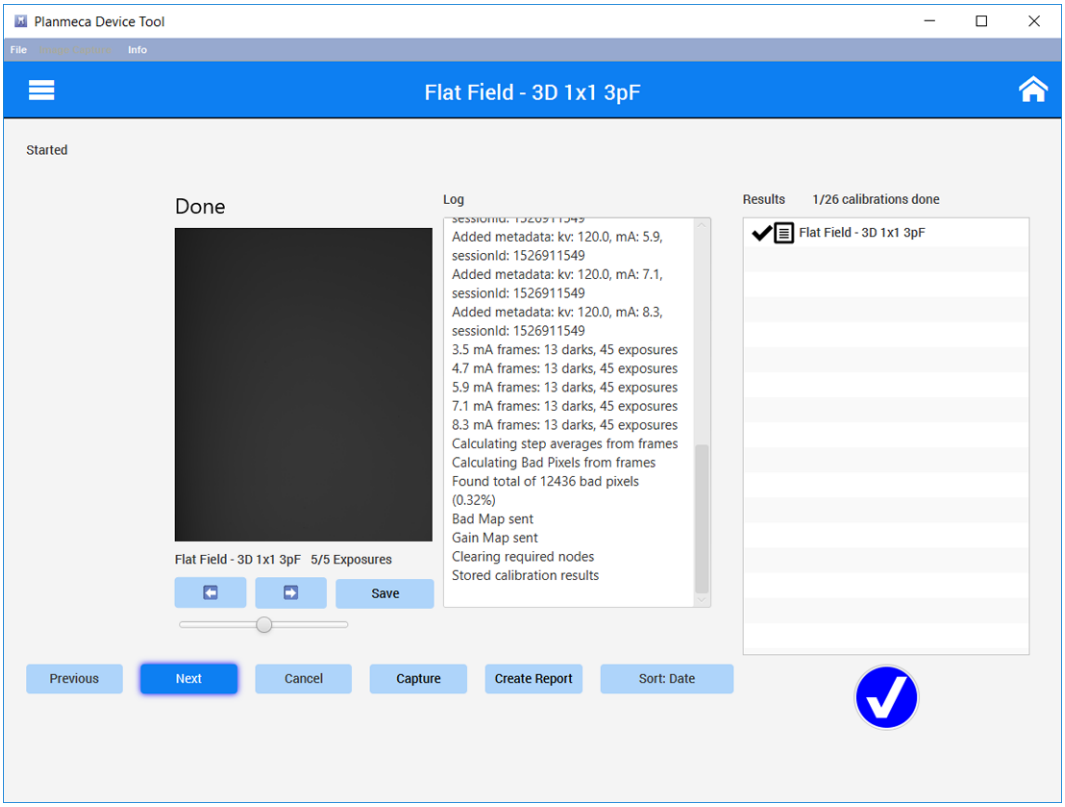

3. Perform all the Flat field calibrations: **1x1 3pF**, **2x2 1pF**, **3x3 0,5pF**, **1x1 0,5pF** and **2x2 0,5pF**.

In case bad map image is unsuccessful

In case bad map image is unsuccessful adjust the blemish threshold for linear value. The blemish threshold defines which pixel is defined as blemish (bad). If pixels value in flat field image differs more than [blemish threshold] % from the flat field images average value, the pixel is marked as blemish.

Too many blemishes may also be due to saturating sensor. It may also be due to collimator adjustment.

1. Select **Settings** from the **File** menu in the Device Tool main page.
2. Enter value to the **Blemish Threshold for Linear Flat Field (%)** field. The value can be adjusted between 3 and 7%. The default value is **5**.
3. Click **OK**.

   If you see plenty of bad columns on the right, left, top and/or bottom side of the image, primary collimator can be incorrectly calibrated.

   It is acceptable to have 1 or 2 columns marked bad on the left and right edges of the image.

5.3.3.3 Beam check - panoramic

1. Click Next on the **Flat field 3D 2x2 0,5pF** window. The system will move to **Beam check - panoramic** calibration.

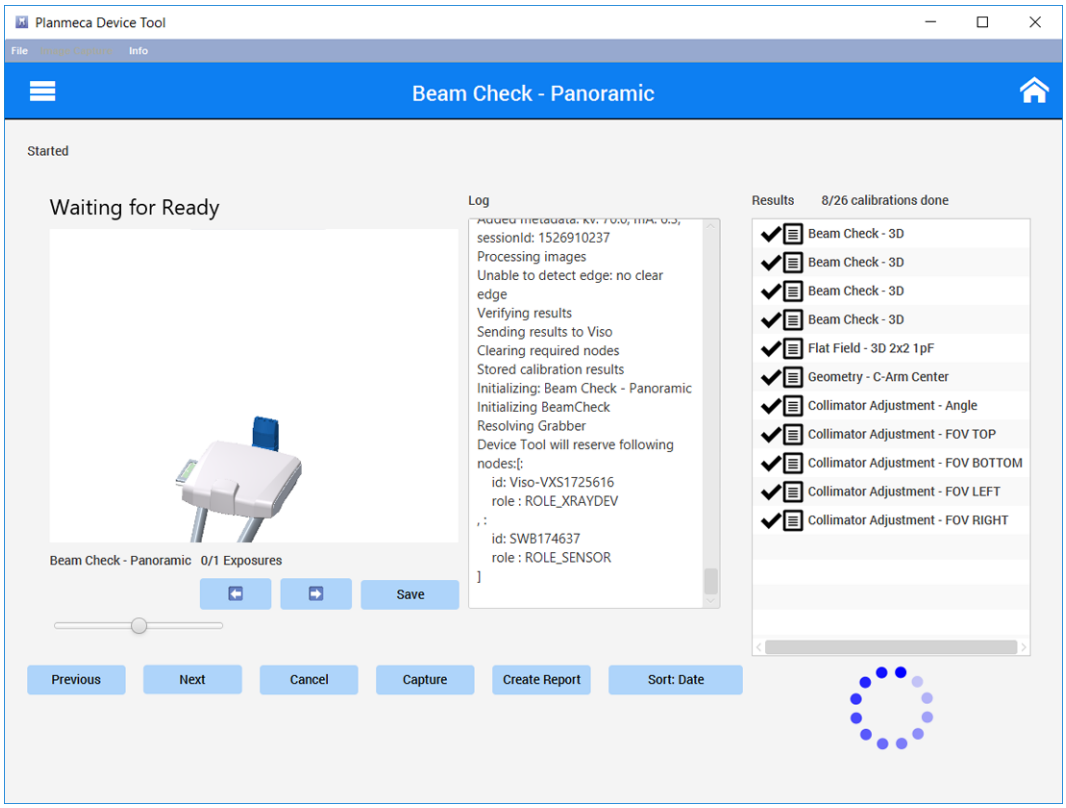

2. Protect yourself from radiation and press the exposure button to take the exposure. The exposure results will appear in the window.
3. As a beam check result, the Device Tool displays three images.

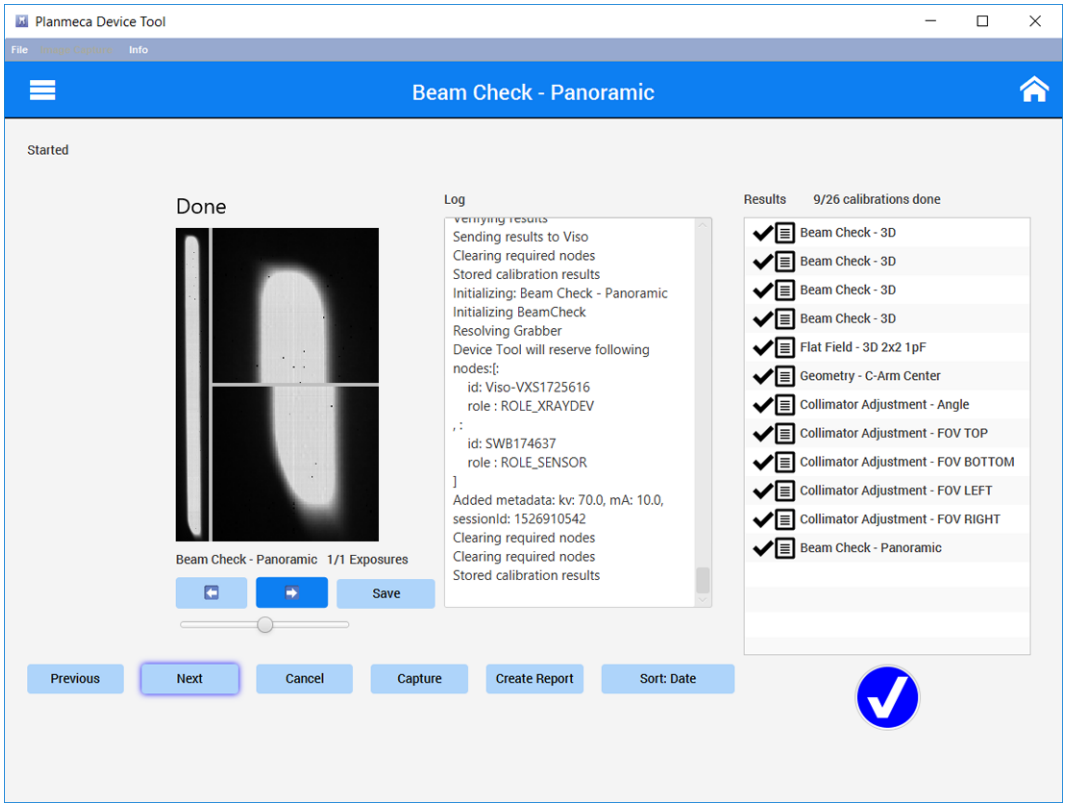

5.3.3.4 Flat field panoramic calibration

1. Click Next on the **Beam check - Panoramic** window. The system will move to **Flat field Panoramic 1x1 0,25pF**calibration.

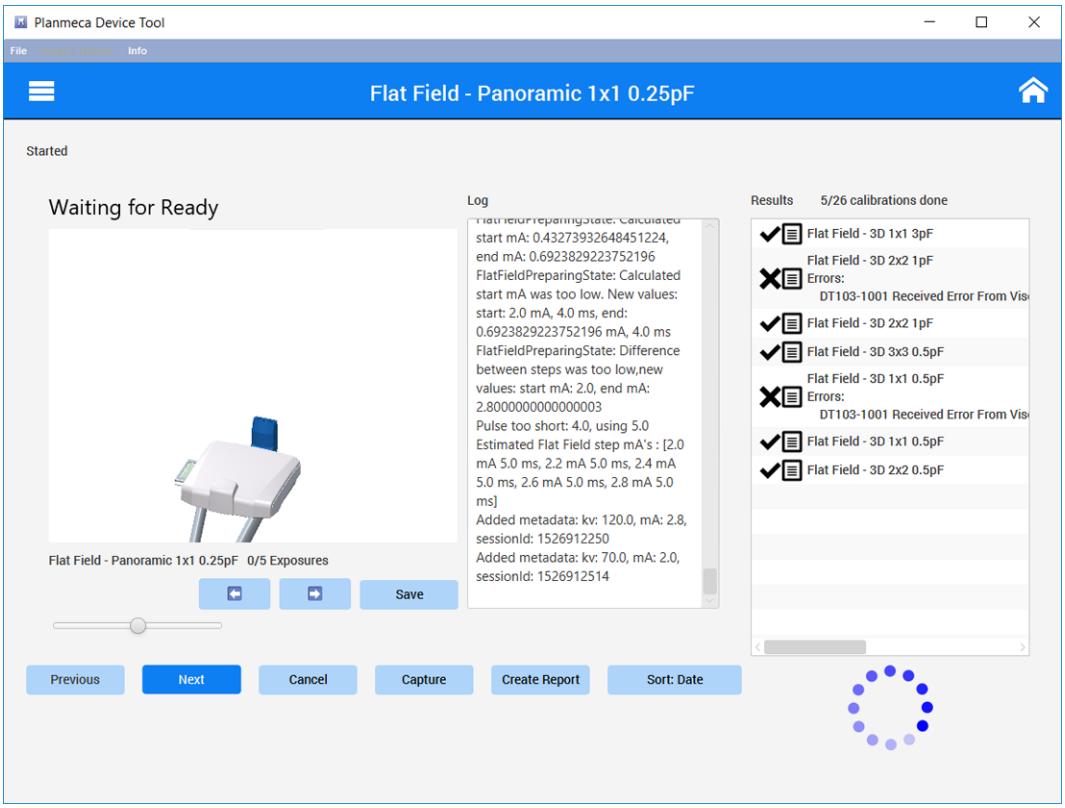

2. Protect yourself from radiation and press the exposure button to take the exposure. The Geometry calibration exposure results will appear in the window.

5.3.3.5 Geometry calibration

NOTE

The geometry phantom must be repositioned between exposures.

C-arm center

1. Position the geometry phantom to the calibration platform front position.

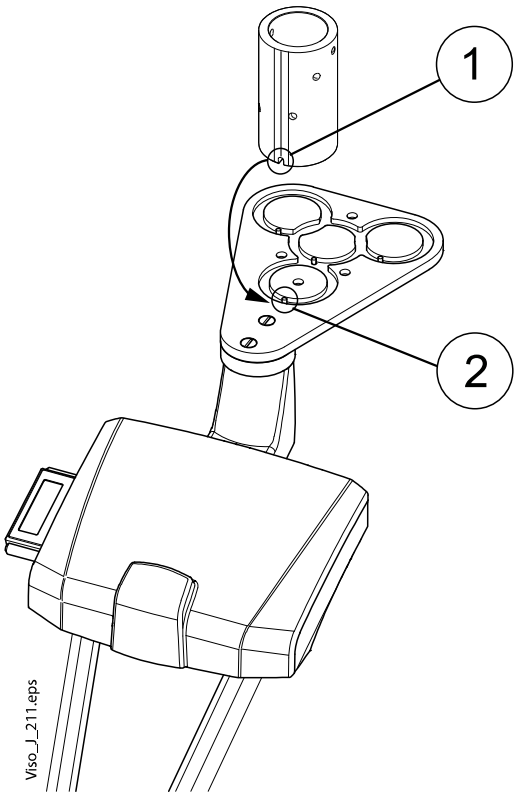

NOTE

Ensure that the geometry phantom is vertical and in full contact with the platform (no gaps) and that the front line is in line with the mark on the platform, that is, the notches on the phantom are directed downwards and the lowest ball on the phantom is directed forwards.

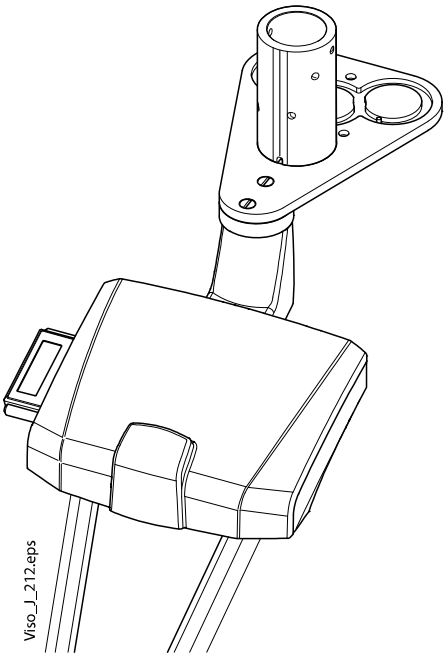

2. Click Next on the **Flat field - Panoramic 1x1 0,25pF** window. The system will move to **Geometry - C-arm center** calibration. The correct position of the geometry phantom is shown on the Preview window.

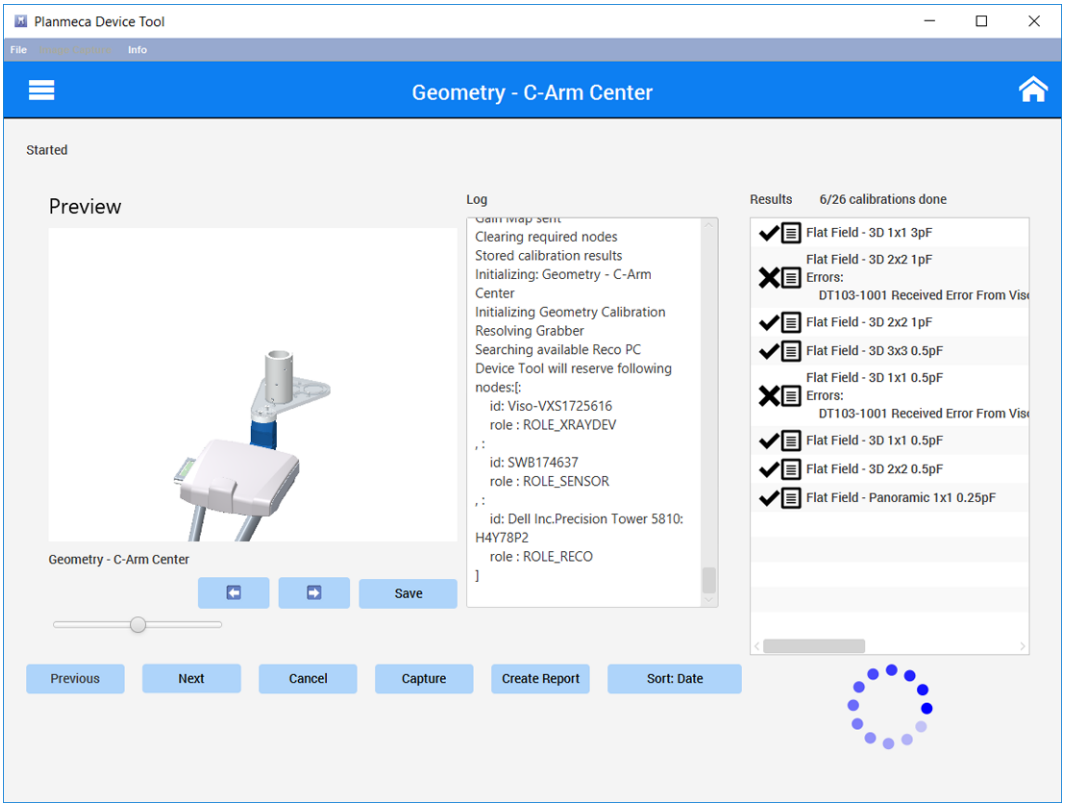

3. Protect yourself from radiation and press the exposure button to take the exposure. The Geometry calibration exposure results will appear in the window.

C-arm left ear

1. Move the geometry phantom to the left ear position.

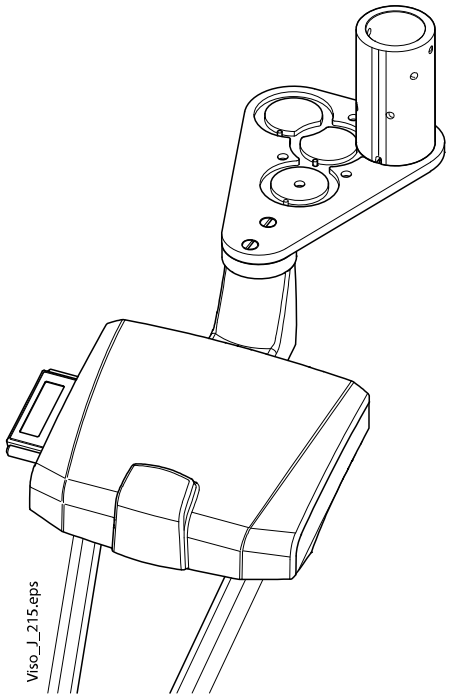

2. Click Next. The system will move to **Geometry - C-arm left ear** calibration. The correct position of the geometry phantom is shown on the Preview window.

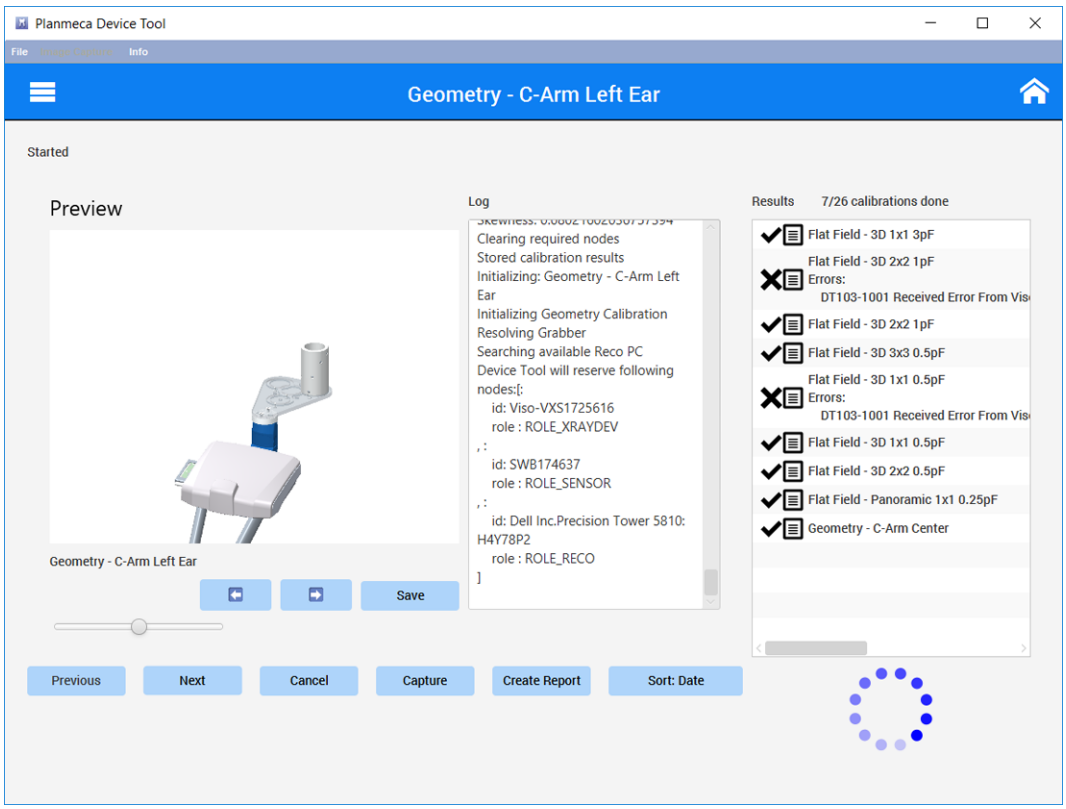

3. Protect yourself from radiation and press the exposure button to take the exposure. The Geometry calibration exposure results will appear in the window.

C-arm right ear

1. Move the geometry phantom to the right ear position.

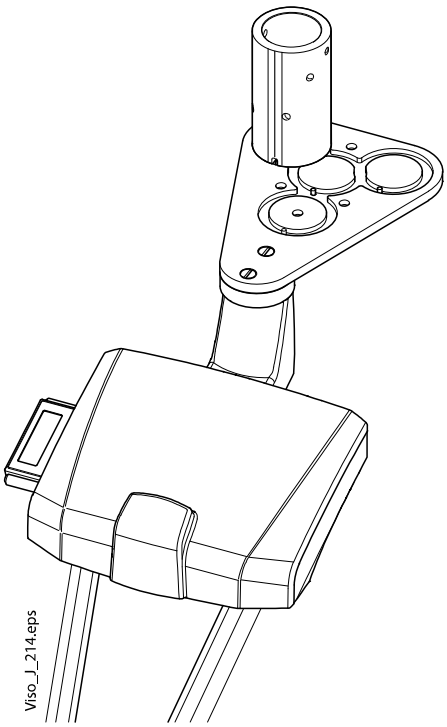

2. Click Next. The system will move to **Geometry - C-arm right ear** calibration. The correct position of the geometry phantom is shown on the Preview window.

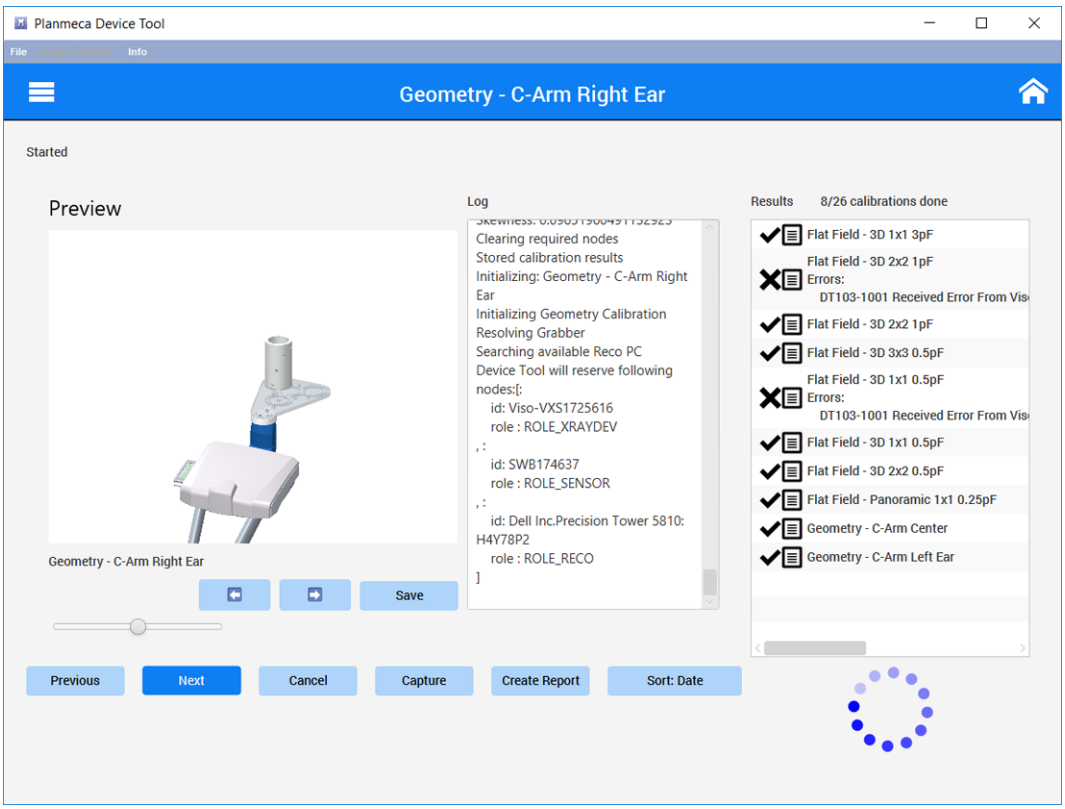

3. Protect yourself from radiation and press the exposure button to take the exposure. The Geometry calibration exposure results will appear in the window.

Elbow arm offset

1. Move the geometry phantom to the elbow arm offset position.

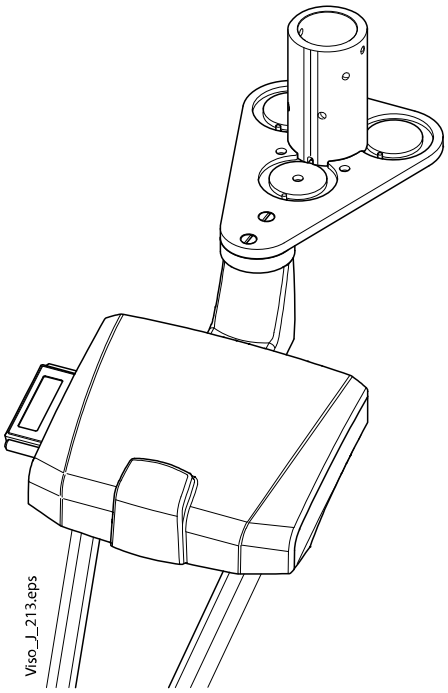

2. Click Next. The system will move to **Geometry - Elbow arm offset** calibration. The correct position of the geometry phantom is shown on the Preview window.

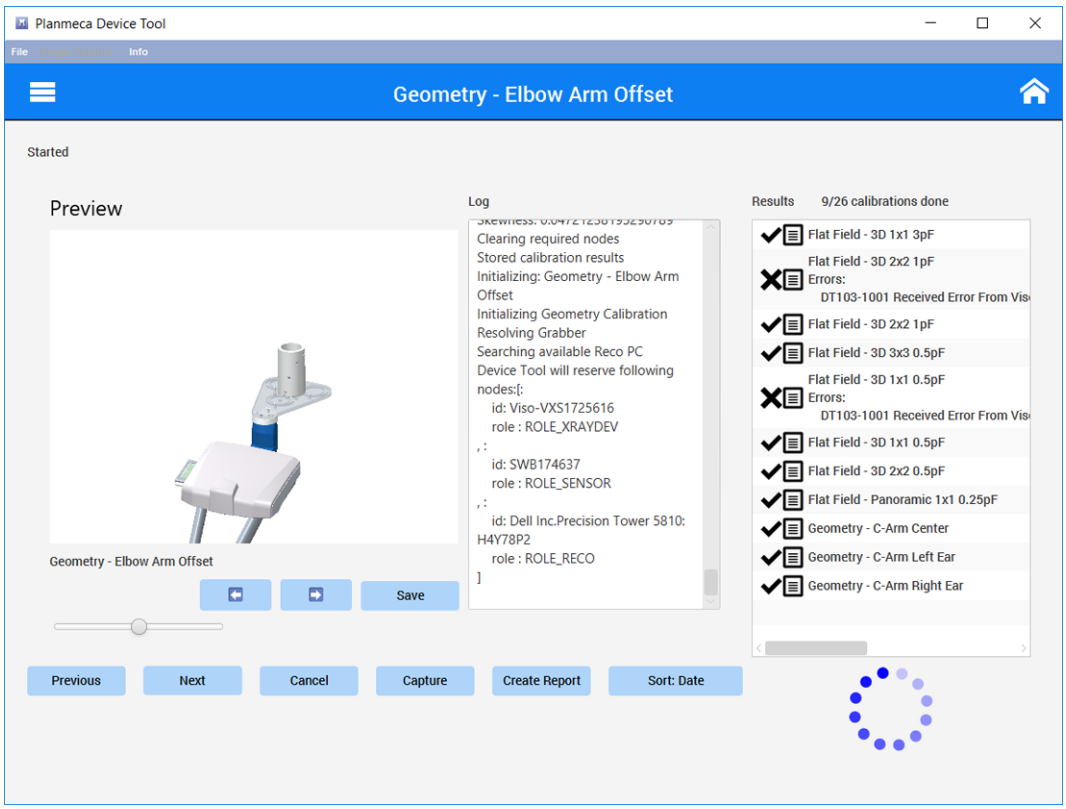

3. Protect yourself from radiation and press the exposure button to take the exposure. The Geometry calibration exposure results will appear in the window.

Elbow arm symmetrical

1. Position the geometry phantom on the calibration platform as shown on the figure below.

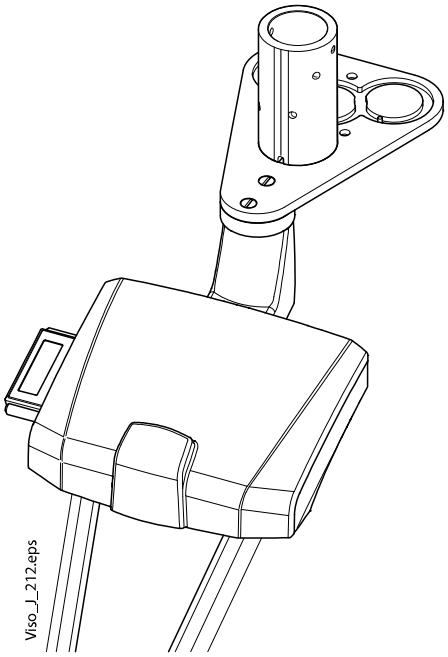

2. Click Next. The system will move to **Geometry - Elbow arm symmetrical** calibration. The correct position of the geometry phantom is shown on the Preview window.

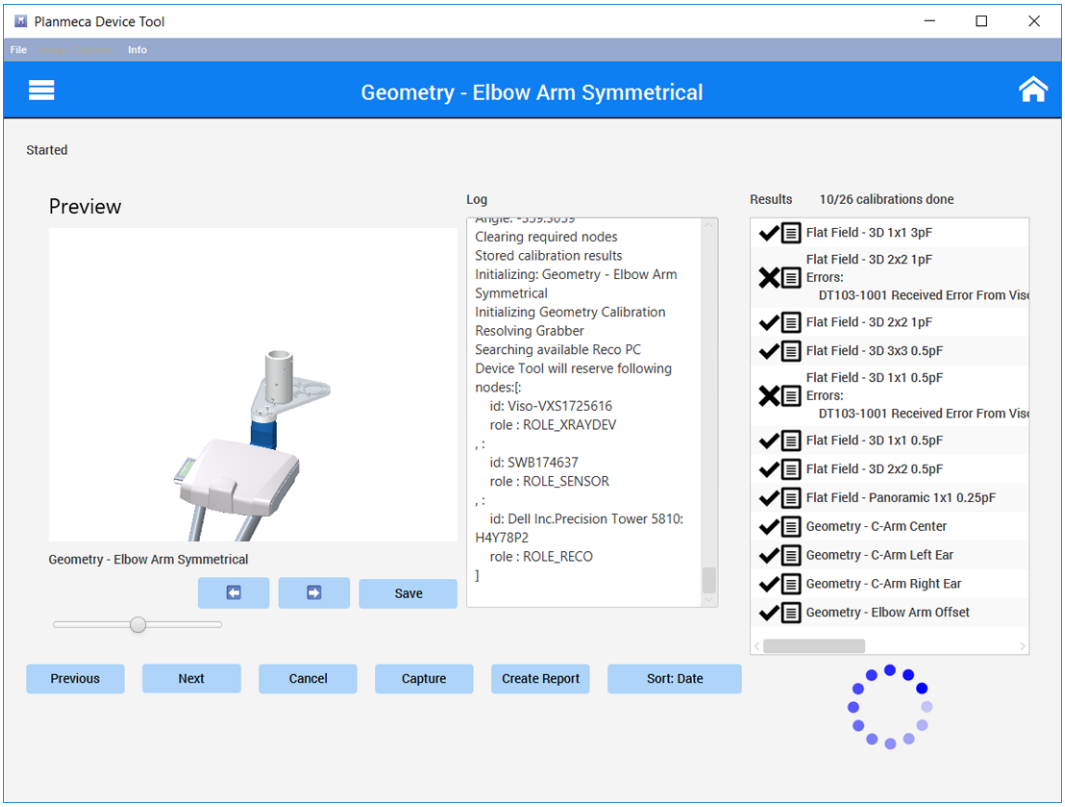

3. Protect yourself from radiation and press the exposure button to take the exposure. The Geometry calibration exposure results will appear in the window.

Corrective actions

If the geometry calibrations are not successful, check the following:

- Check that geometry phantom is in correct position and not upside down.
- Check that the distance between patient support base and the sensor is correct.
- Do a imaging arm calibration and try again to run the calibrations.

5.3.3.6 3D quality assurance (QA) test

The Q tests can be performed using either the Device Tool or Device Tool QA programs.

1. Attach the 3D QA phantom to the patient support base.

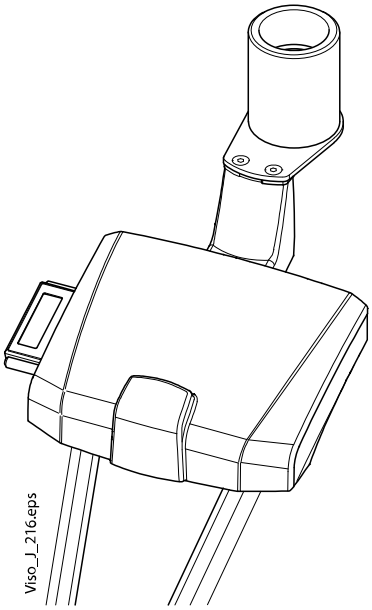

2. Click Next on the **Geometry - Elbow arm symmetrical** window. The system will move to **Planmeca QA - QA PM C-arm center** calibration.

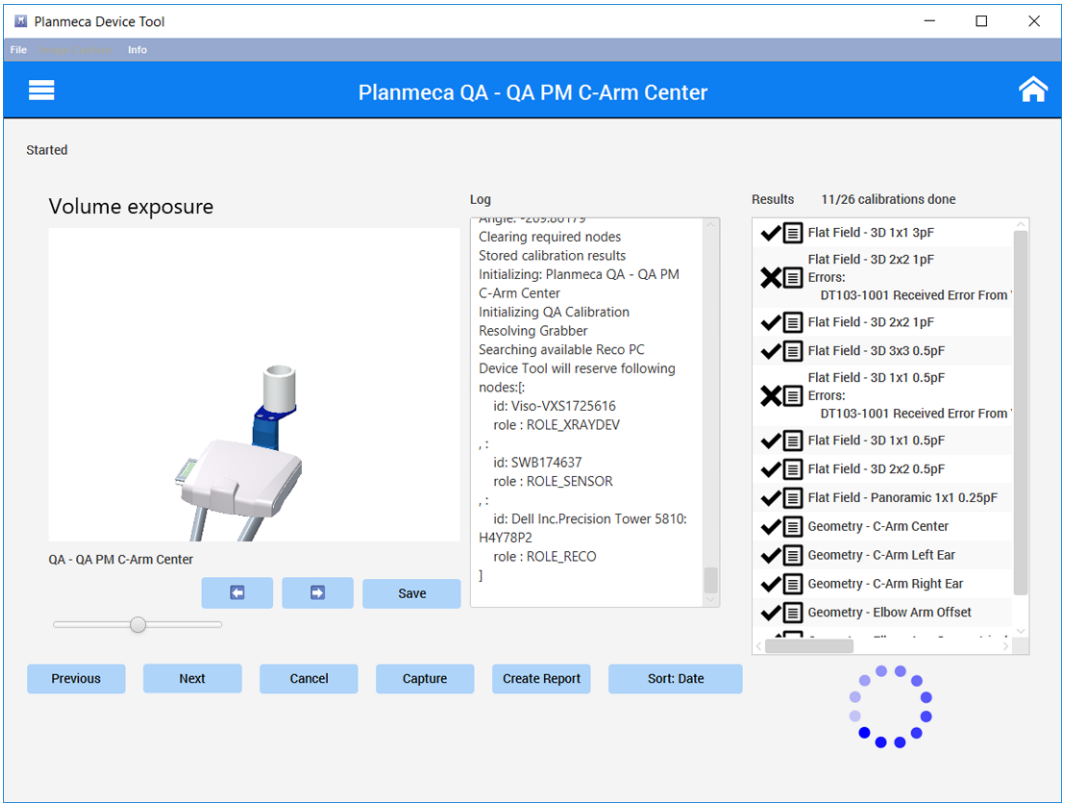

3. Protect yourself from radiation and press the exposure button to take the exposure. The test results will appear in the window.

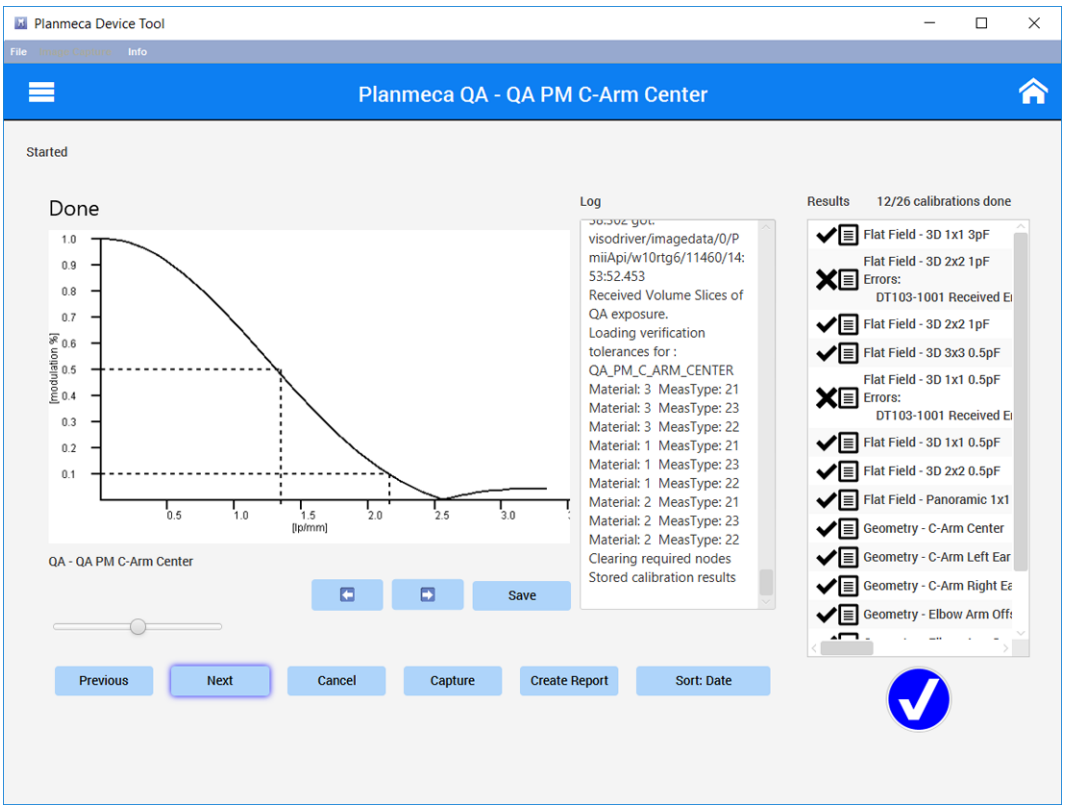

4. If the QA test fails, the unit is not correctly adjusted and calibrated. Check the patient support lift calibration. Refer to section "Patient support lift calibration" on page 103.

5. Perform the other QA tests.

5.3.3.7 Camera calibration

Chessboard calibration

1. Attach the chessboard tool to the adapter on the patient support base so that the chessboard grid points forward.

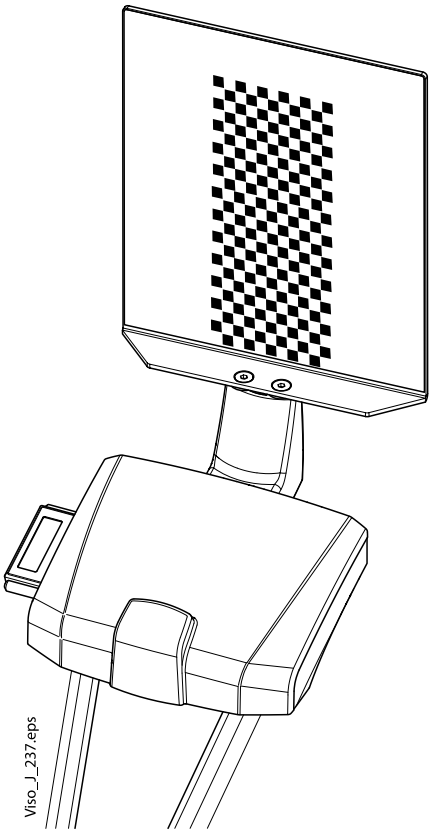

2. Click Next on the **Planmeca QA - QA PM elbow offset** window. The system will move to **Camera calibration - chessboard calibration**. The calibration will start automatically!

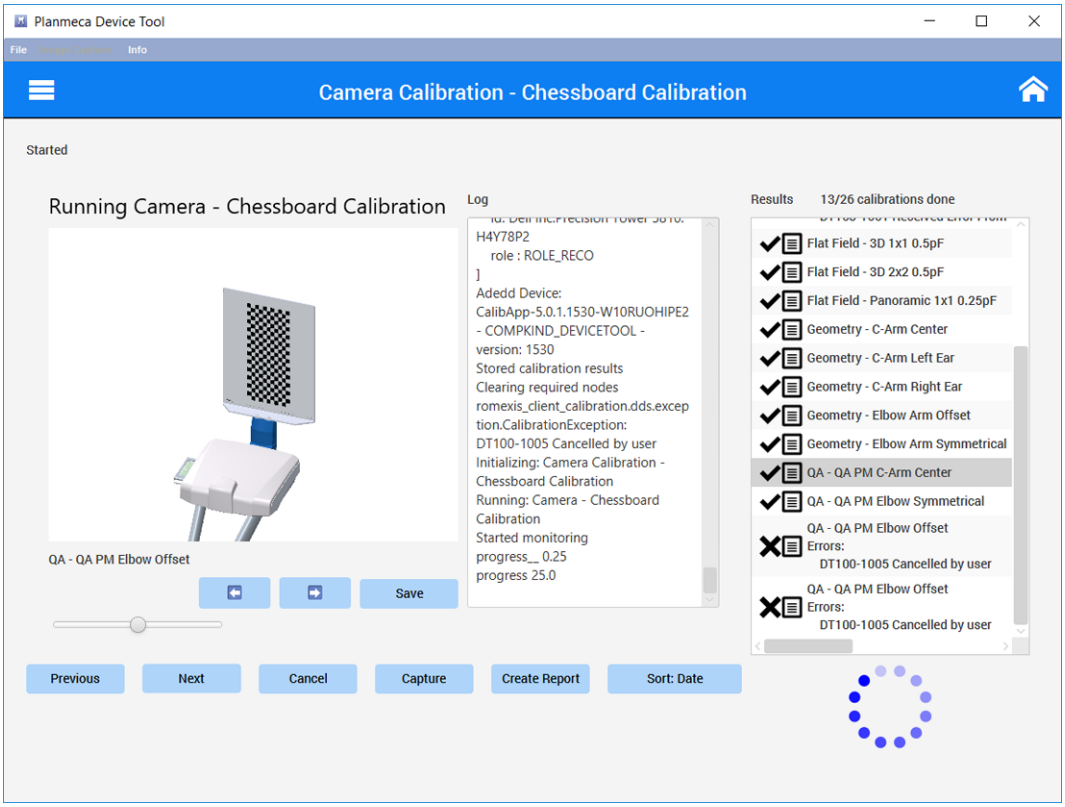

3. After the succesfully calibration remove the chessboard tool from the adapter.

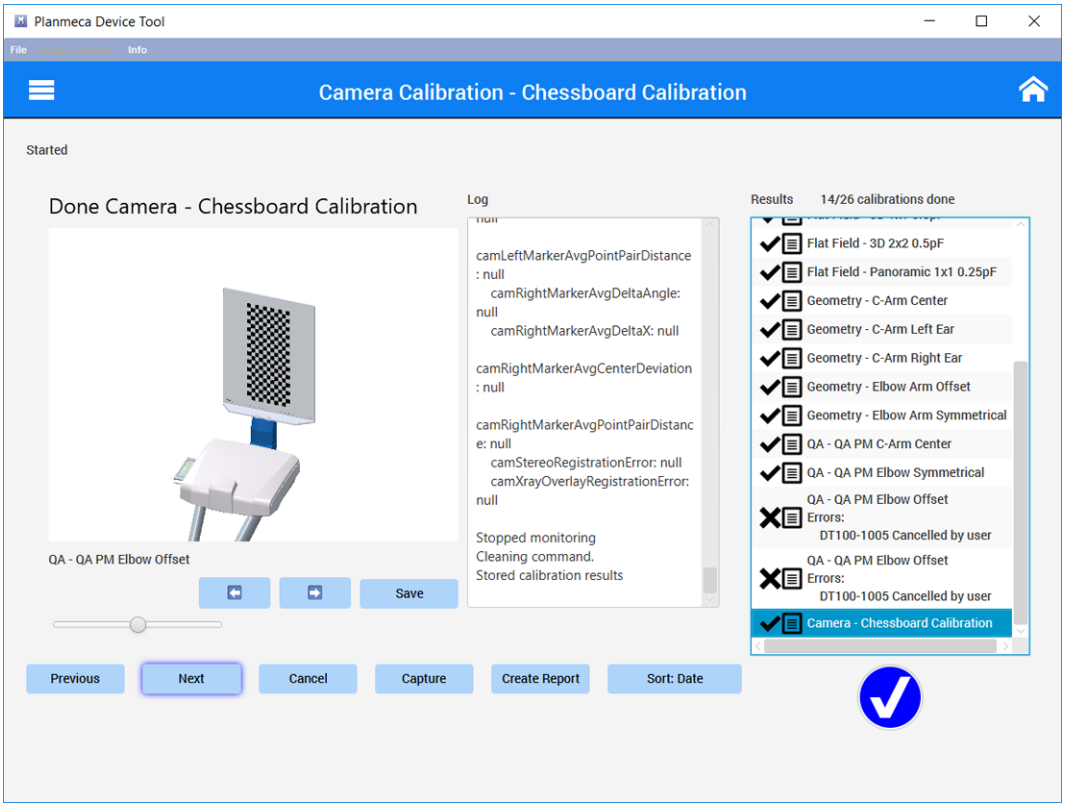

Pose volume calibration

1. Attach the surface phantom to the adapter on the patient support base.

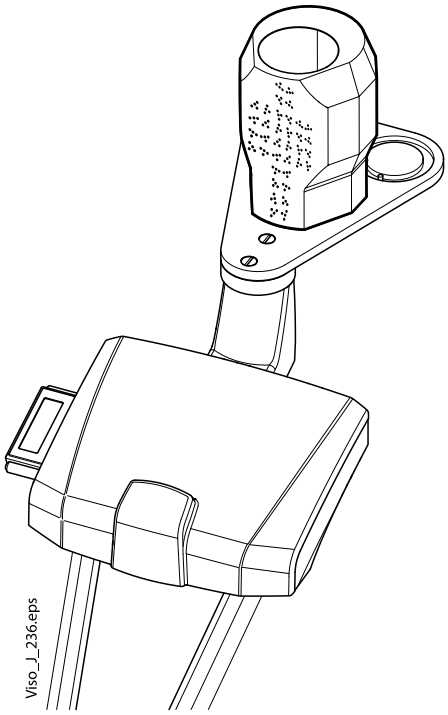

2. Click Next on the **Camera calibration - chessboard calibration** window. The system will move to **Camera calibration - Pose volume** calibration.

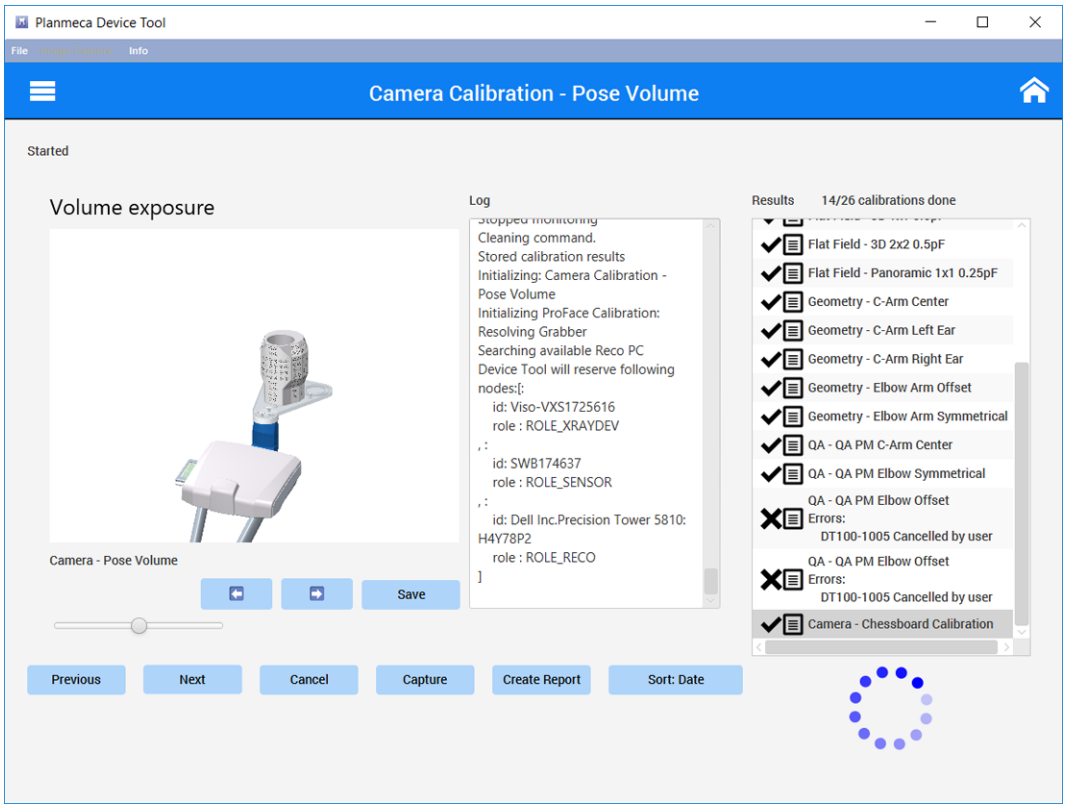

3. Protect yourself from radiation and press the exposure button to take the exposure. The esposure results will appear in the window.

Pose calibration

1. Click Next on the **Camera calibration - Pose volume** window. The system will move to **Camera calibration - Pose calibration**. The calibration is started automatically.

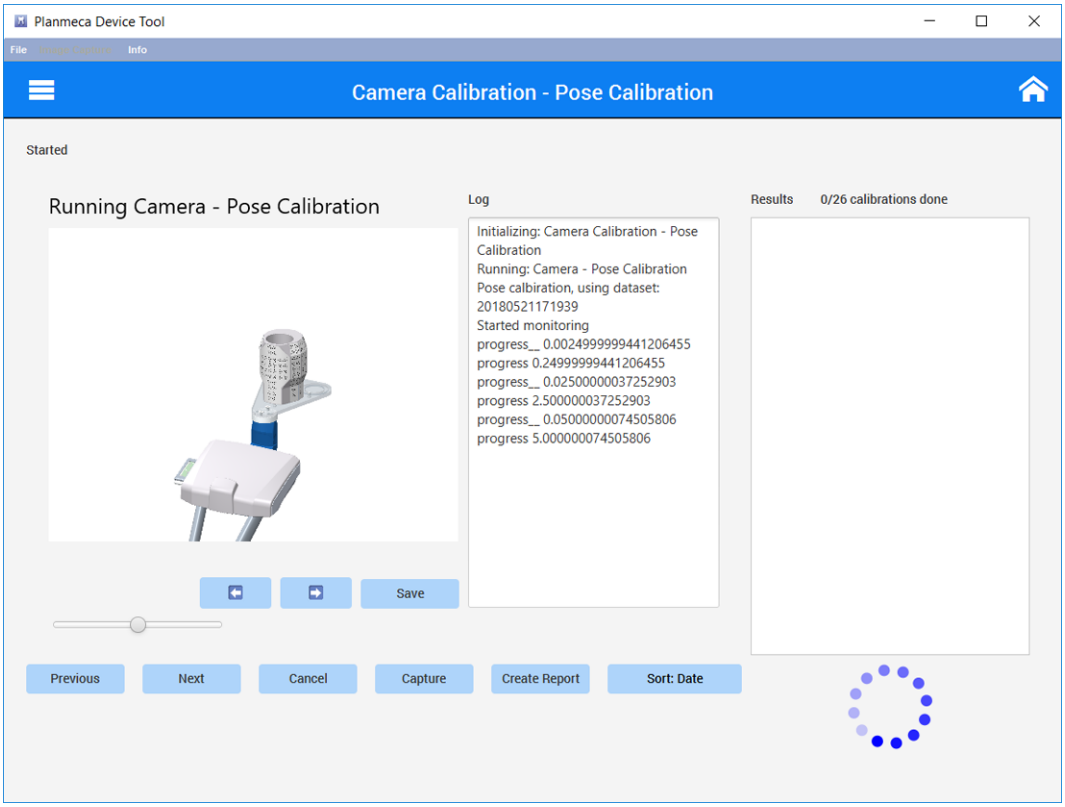

2. After the succesfully calibration remove the tool from the adapter.

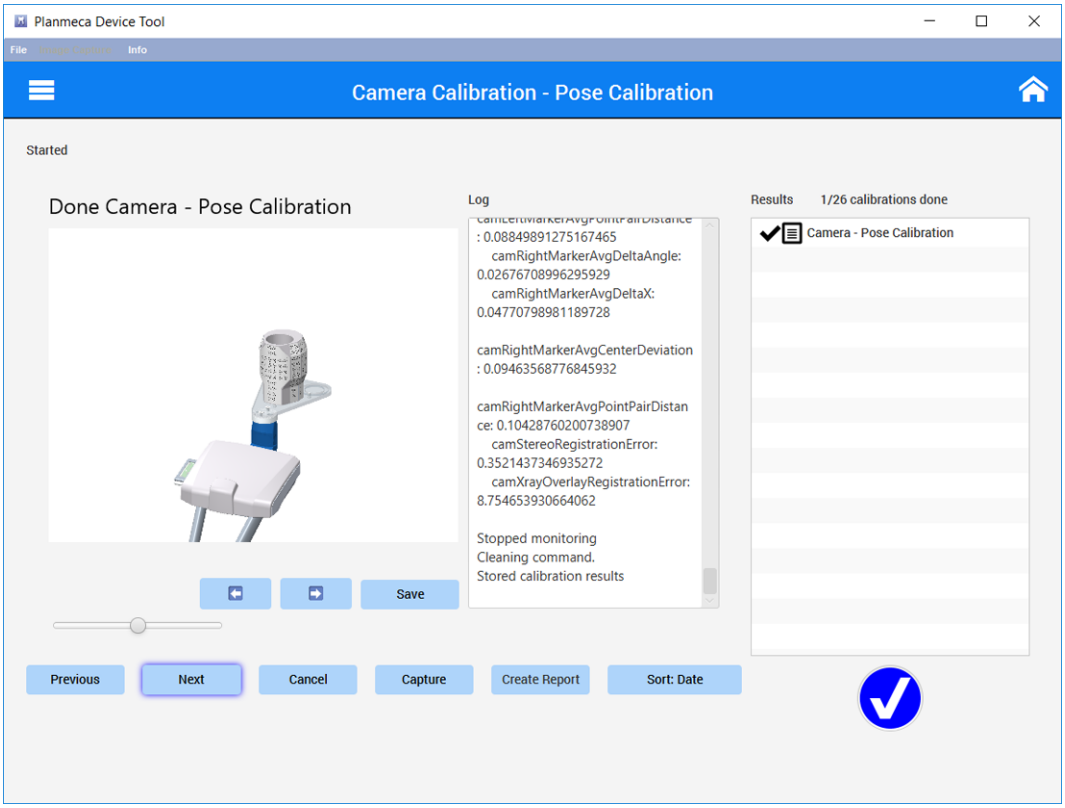

5.3.3.8 Manual blemish marking

The manual blemish marking tool can be used to mark bad pixels or blemishes in the images manually, if the automatic flat field calibration was not able to mark all the pixels correctly.

NOTE

Flat field calibration must be completed before you can start the manual blemish marking process.

1. Start the **Device Tool** and click **Manage Imaging System** button.
2. In the **Manage Imaging System** window click the **Get Info** button under the below **3D Sensor**. The sensor serial number is displayed in the **Log** window.

   NOTE

   The serial number can also be found on the sensor.
3. Start the manual blemish marking tool, click the **File** menu and select **Manual blemish marking**.
4. Click the **Load Bad Map** button.

   A drop-down menu displays all sensors which have been used for imaging.
5. Select the appropriate sensor (serial number checked earlier) and desired bad map (resolution/PAN, SmartPan) from the list.

   A bad map screen displays, with the bad pixels marked automatically during the flat field calibration shown as white pixels.
6. Load reference image:
   - If marking 1x1, 2x2 or 4x4 bad pixels, click **Load Raw Frames** button.
   - If marking SmartPan bad pixels, click **Load SmartPan Raw Frames** button.
7. Select appropriate frameset.

   The images display in the menu according to the date and time of exposure.

   The frameset opens in **Raw frames** tab. Browse images with the horizontal scroll bar.
8. Mark the bad pixels.

   If you can now see a bad pixel or a line in the raw frames, but it is not marked as a white pixel/line on a bad map, you can mark it manually.

   The image selected in the **Raw Frames** tab is automatically updated to **Bad Map** tab.
   - To mark bad pixels in the images click **Mark as Bad Pixel** button
   - To undo the bad pixel marking click **Mark as Good Pixel** button
   - To mark the entire bad columns or rows right-click on the image and select from the opening menu the appropriate option
9. To import the image on top of the pixel map click the **Show Raw Frame** button.

NOTE

When selected bad map and reference image are not the same size the Width and Height values show in red. Use reference images taken with the same sensor and resolution.

5.4 Sensor assembly adjustment

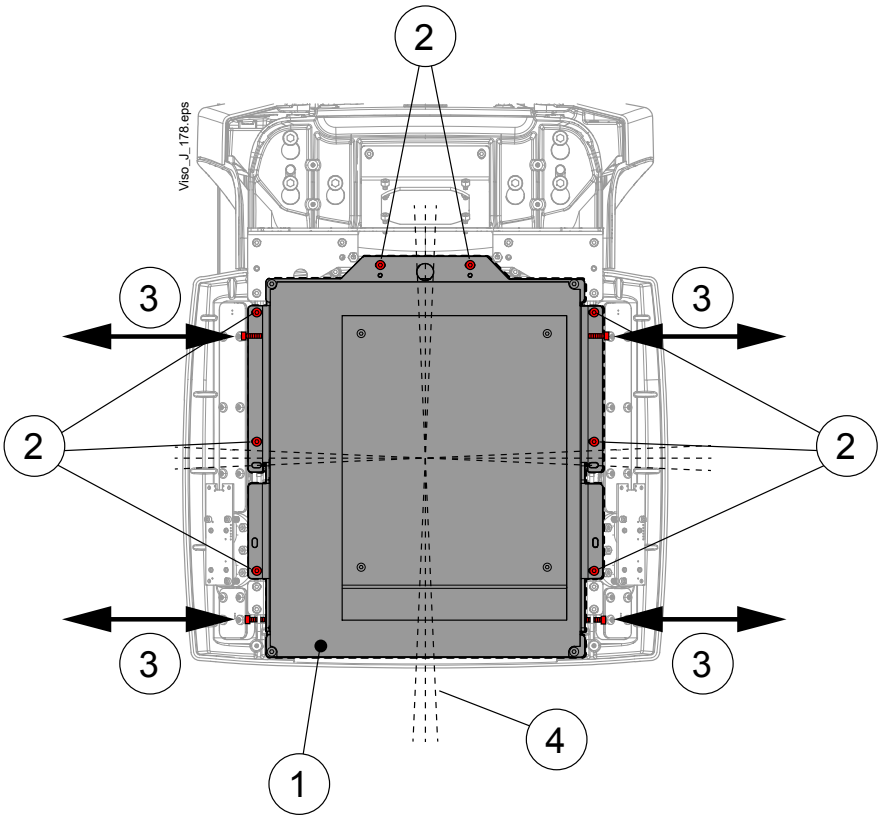

The sensor assembly (1) position is checked by performning the Device tool **Geometry - C-arm center** calibration. If needed, the sensor assembly horizontal position and angle can be adjusted as follows.

1. Loosen eight sensor assembly attachment screws (**2**).
2. Adjust the sensor assembly position using the four adjustment screws (**3**), until the sensor assembly is upright and its horizontal position is correct (**4**).

   When adjusting the assembly position in horizontal direction turning adjustment screw approx. ¼ turns corresponds 0.2 change in panel position value.
3. Tighten the sensor assembly attachment screws (**2**).

5.5 Collimator adjustment

Note the following issues before starting the adjustments

1. The angle of all four collimator blades can be separately adjusted.
2. For each blade there are two adjustment screws. When adjusting the blade angle, at first the other screw must be loosened and then the opposite site screw can be then tightened, while the angle of the blade changes.

NOTE

Do not tighten hard the opposite site screw but only screw it until it reaches the other screw.

3. A special extended 2 mm Allen key is required to reach and to adjust the screws.
4. The adjustment screws are accessible through the holes located on the each side of the collimator frame. To find an appropriate adjustment screw, there are figures to help to locate the adjustment screws later in these instructions.
5. Adjust the collimator blades with small steps, rotate the adjustment screws e.g. only 1/8, 1/4 or 1/2 rounds at a time.
6. From the **Report** or from the **Collimator adjustment -angle results** on the Device tool display, find out which blade and which direction the blade angle should be adjusted.
7. The test image on the Device tool display is positioned as seen from the tube head direction, that is, it is a left-right mirror image. The blades to be adjusted according to the test image are shown with figures later in these instructions.

Adjusting the collimator blade angles

Remove the tube head covers, see section "Removing C-arm covers" on page 124.

If the right side borderline in the test image is tilted, use the screws **(1)** and **(2)** to adjust the collimator blade **(3)** angle.

If the left side borderline in the test image is tilted, use the screws **(4)** and **(5)** to adjust the collimator blade **(6)** angle.

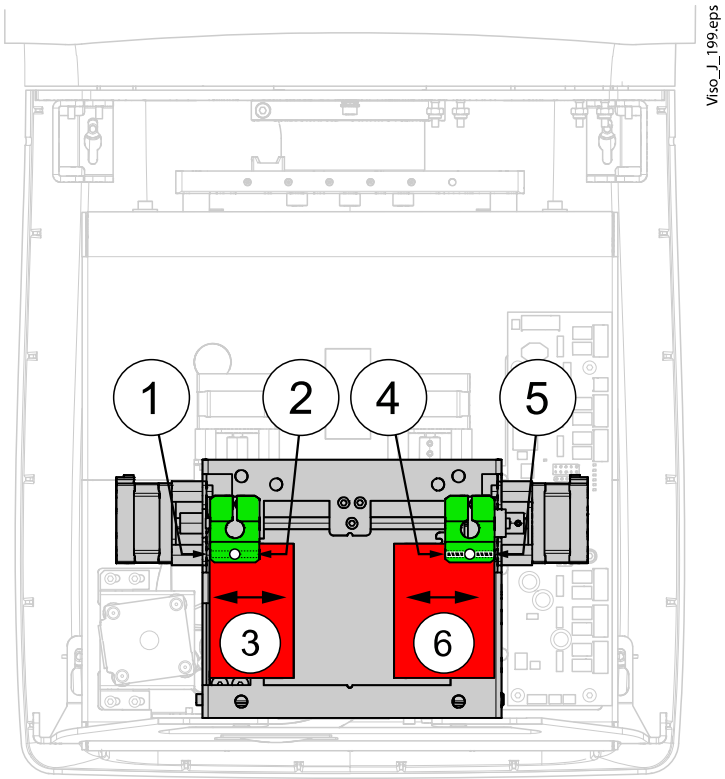

If the upper side borderline in the test image is tilted, use the screws **(1)** and **(2)** to adjust the upper side collimator blade **(3)** angle.

If the bottom side borderline in the test image is tilted, use the screws **(4)** and **(5)** to adjust the bottom side collimator blade **(6)** angle.

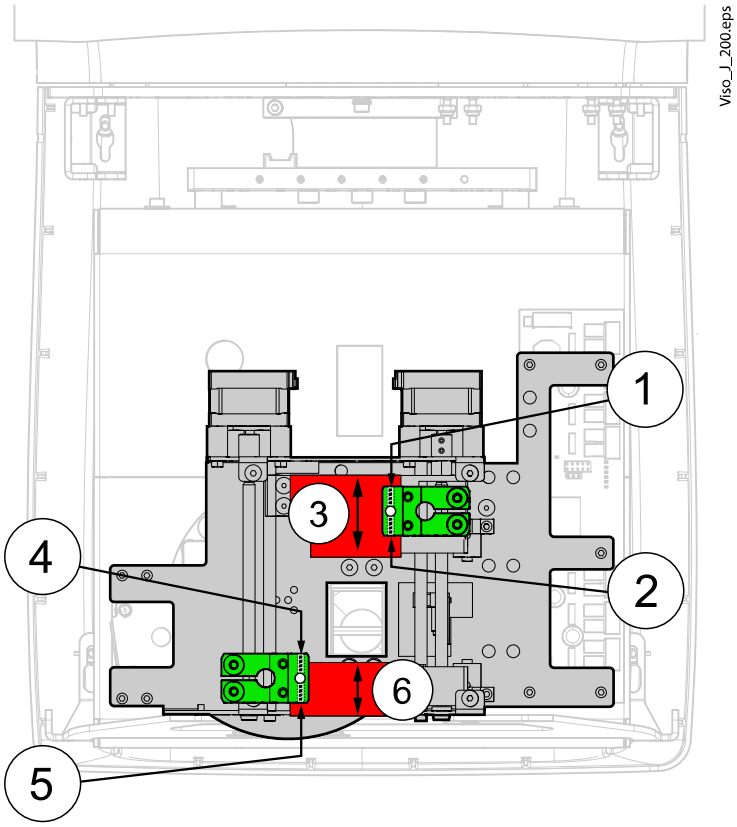

After adjustment perform the **Collimator adjustment - Angle** calibration again. Check the calibration result is Passed: true. Readjust the collimator blade angles if needed.

Attach the removed covers.

5.6 Adjusting C-arm rotation movement

1. Select **Technical** from the bottom of the display.

   The technical setting mode is password protected and the password is asked when the mode is entered for the first time after switching the unit on. The password is 1701.

2. Touch **Calibrations (3200)** and select **Imaging arms (3250)** and **Imaging arms ratio (3253)**.

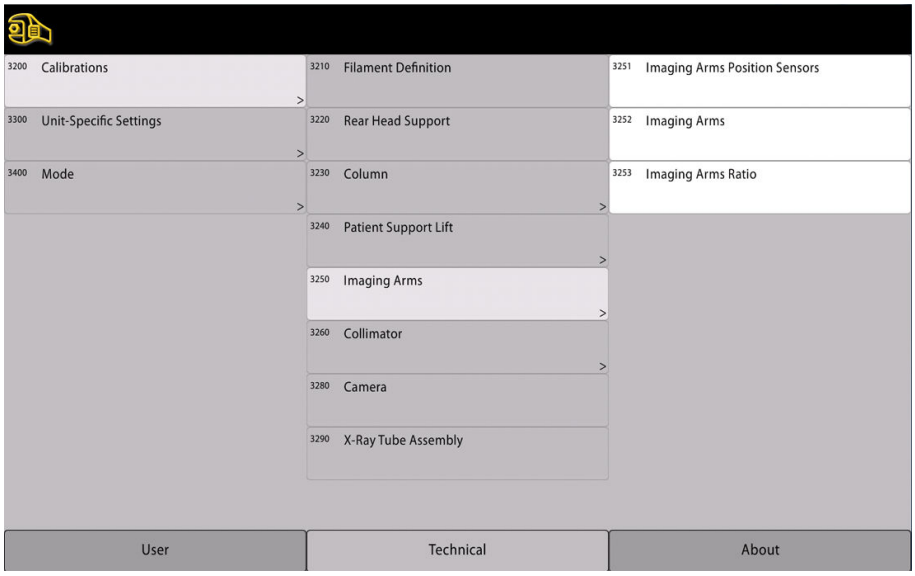

3. The following display appears.

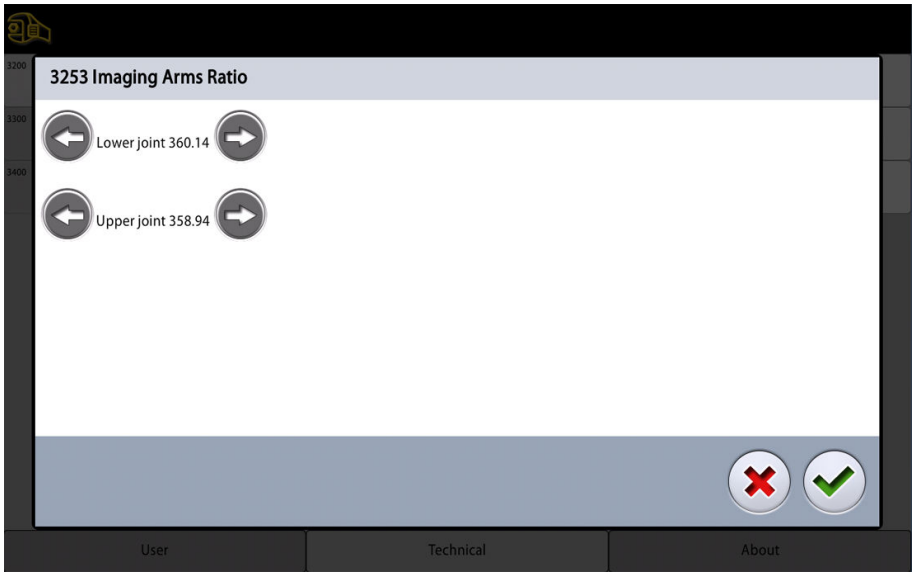

4. Increase the **Lower joint** value if the angle is > -210.00. Decrease the value if the angle is < -210.00.
5. Exit the calibration mode by touching the green check mark button.

5.7 Column adjustments

5.7.1 Adjusting moving column position

Sidways adjustment

1. Drive the column near the lowest position (**1**).
2. With a spirit level, check that the moving column is parallel with the stationary column sideways (**2**).
3. To adjust the column position loosen the two attachment screws (**3**) on the left side of the column. Adjust the moving column position with attachment screws (**3**) and nuts located between the columns (**5**) so that

the space between the columns on the left side is equal to the space on the right side (**4**), and the moving column is parallel with the stationary column.

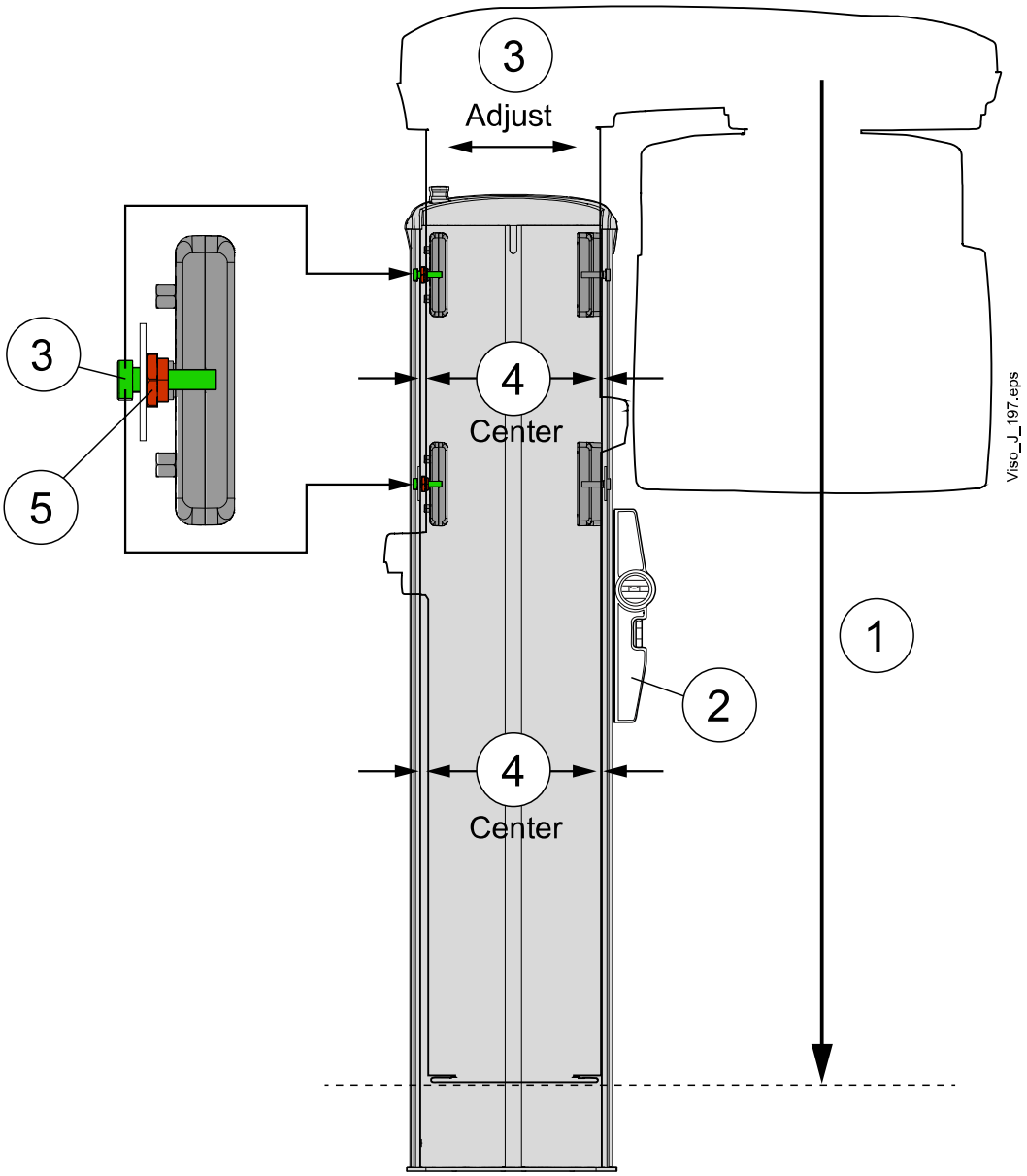

4. Tighten the attachment screws.

Adjustment in depth

1. Drive the column near the lowest position (**1**).
2. With a spirit level, check that the moving column is parallel with the stationary column in depth (**2**).
3. Loosen the lower attachment screws located on the left and right sides of the column (**3**).

4. Manually adjust the moving column position (**4** and **5**) so that it is parallel with the stationary column (**6**) as shown on the figure below. Note, that the adjustment washers below the attachment screws moves when you move the column (**4** and **5**).

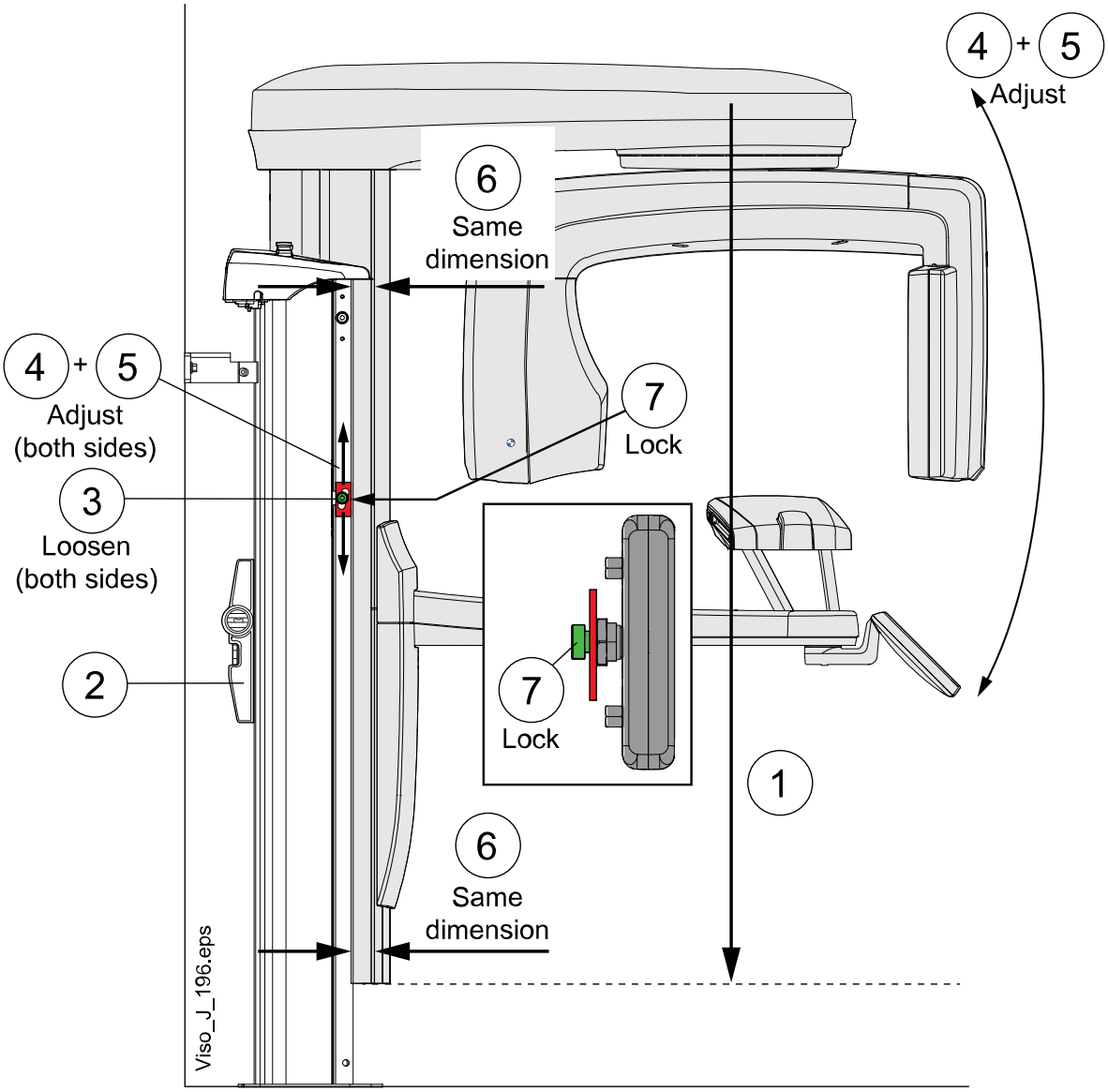

5. Tighten the attachment screws (**7**).

5.7.2 Calibrating column motor position sensor

CAUTION

Protect yourself against electrical shock. The X-ray unit contains live parts on some PCBs and connectors.

1. Remove the stationary column top cover (**1** in the image below).

2. Using the height adjusting buttons, drive the moving column into position where the distance between the moving column and bottom plate is 480 ± 3 mm.

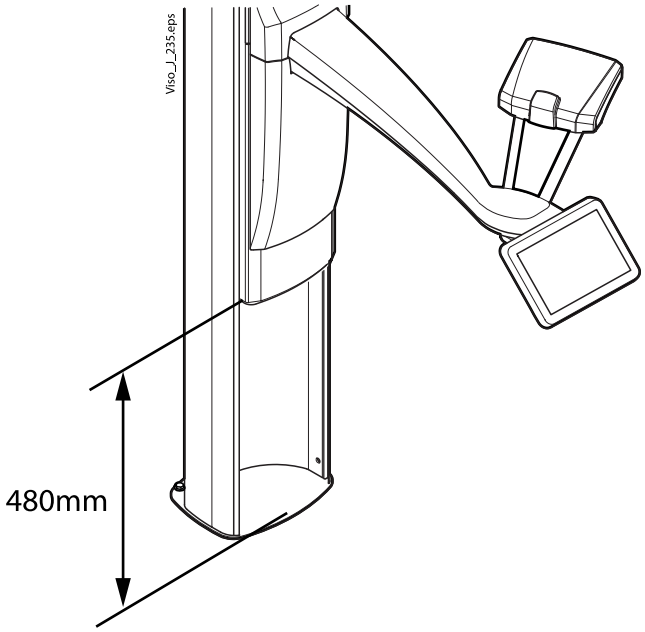

3. Touch **Technical** and enter password (1701).
4. Touch **Calibrations (3200)** and select **Column (3230)** and **Column position sensor (3231)**.

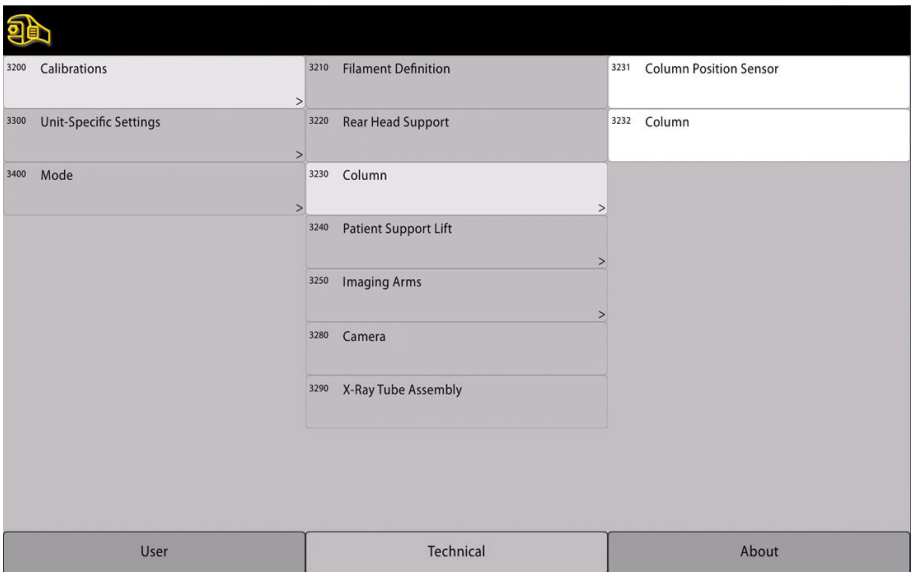

5. The following display appears.

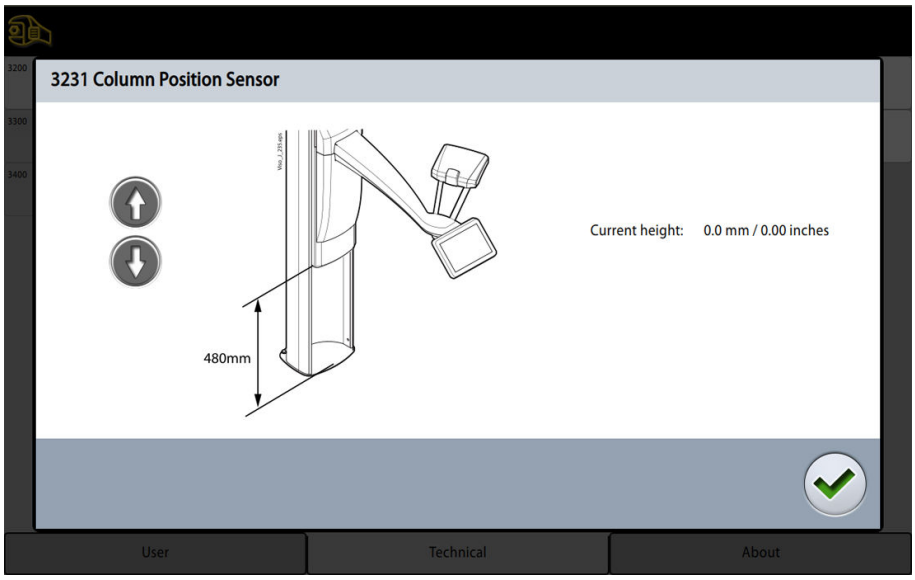

6. Check the **Current height** field. If the value in the field is 480 ± 3 mm, the sensor is correctly calibrated. If the value in the field is outside this range, the sensor has to be calibrated, see instructions below.
7. If needed, calibrate the lift motor sensor as follows. Loosen two attachment screws (**1**) of the cog wheel assembly. Move the assembly (**2**) away from the worm screw so that you can rotate the cog wheel (**3**) freely. Rotate the cog wheel (**3**) until the value in the **Current height** field is correct in the **Column** display.

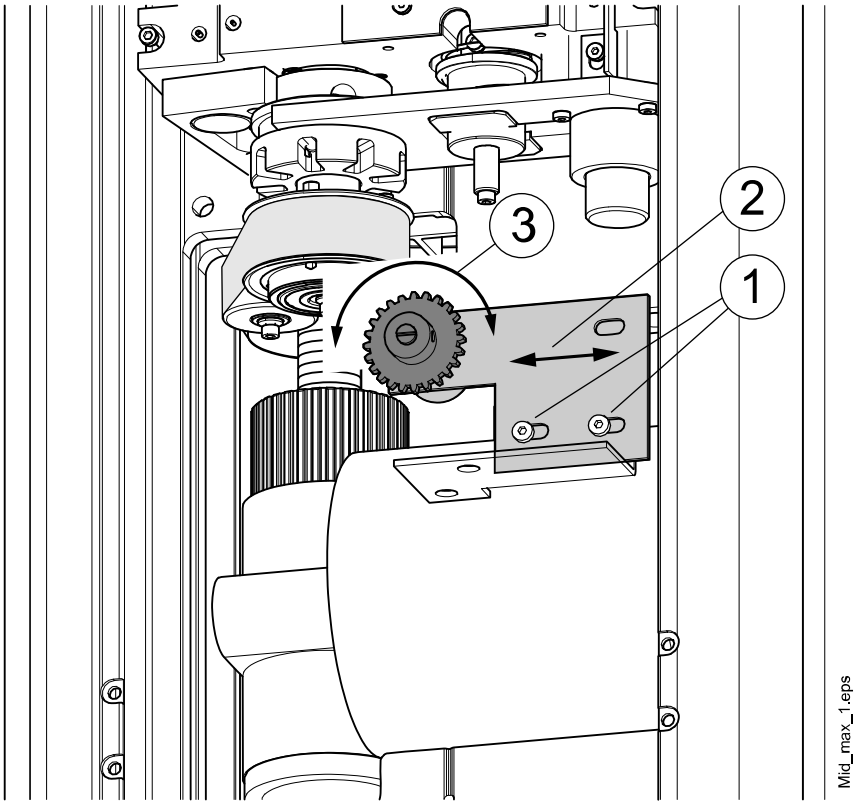

8. Move the assembly back to its position and tighten the attachment screws. When moving the assembly back to its position make sure that the cog wheel is correctly compared to the the worm screw (**2** on the figure below). If the cog wheel is too close to the worm screw **(1)**, the eccentricity of the axle damages the position sensor. If the cog wheel is

too far from the threaded axle of the motor, the eccentricity of the axle causes the cog wheel to slip and loose position **(3)**.

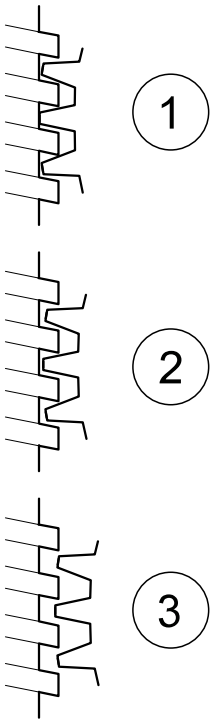

9. Exit the calibration mode by touching the green check mark button.
10. Attach the stationary column top cover.

5.7.3 Setting column maximum height

1. Enter calibration mode:
   1. Touch the service spanner on the **Main** display.
   2. Touch **Technical** and enter password (1701).
   3. Touch **Calibrations (3200)** and select **Column Calibration (3230)** and **Column position sensor (3232)**.

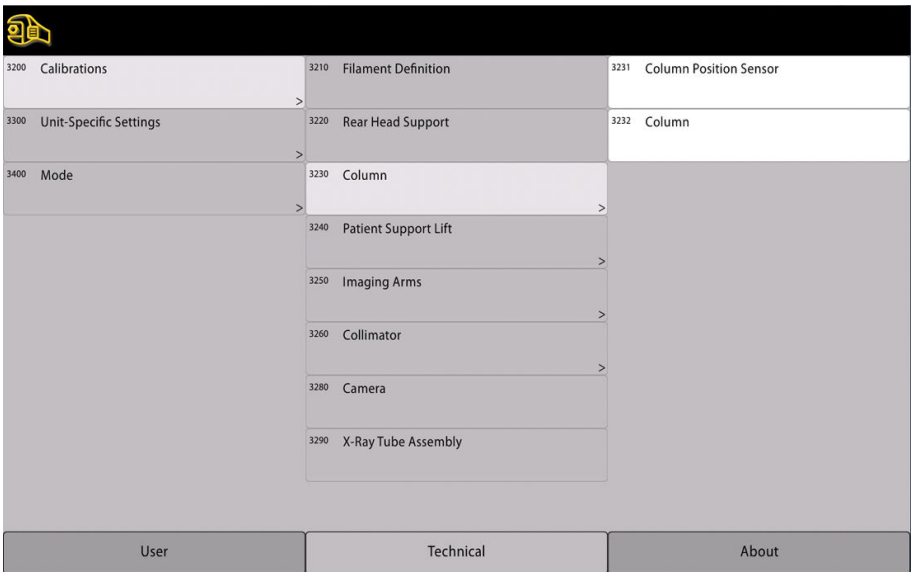

2. The following display appears.

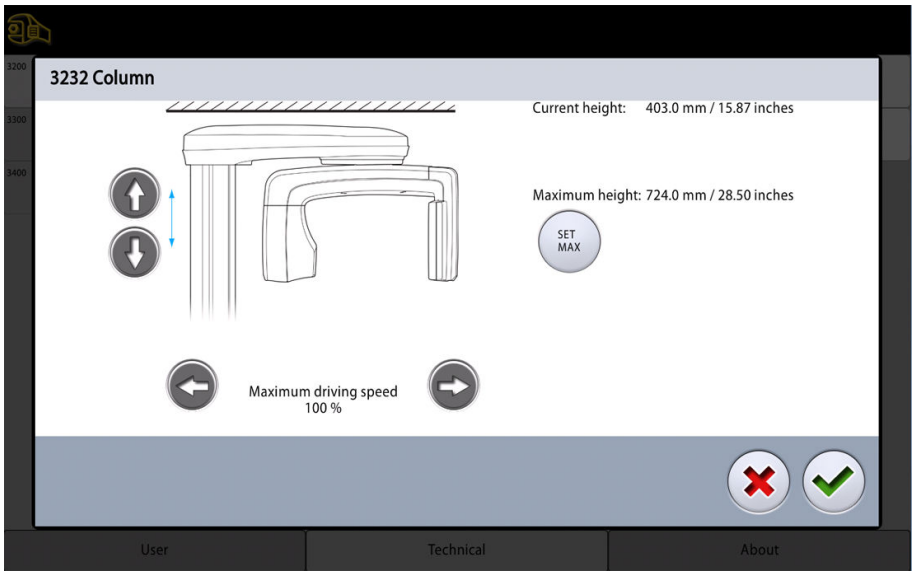

3. Using the height adjusting buttons, drive the telescopic column into desired maximum height position.
4. Save the new value by touching the **SET MAX**button.
5. Exit the calibration mode by touching the green check mark button.

5.7.4 Setting column motor maximum speed

1. Enter the calibration mode:
   1. Touch the service spanner on the **Main** display.
   2. Touch **Technical** and enter password (1701).
   3. Touch **Calibrations (3200)** and select **Column Calibration (3230)** and **Column (3232)**.

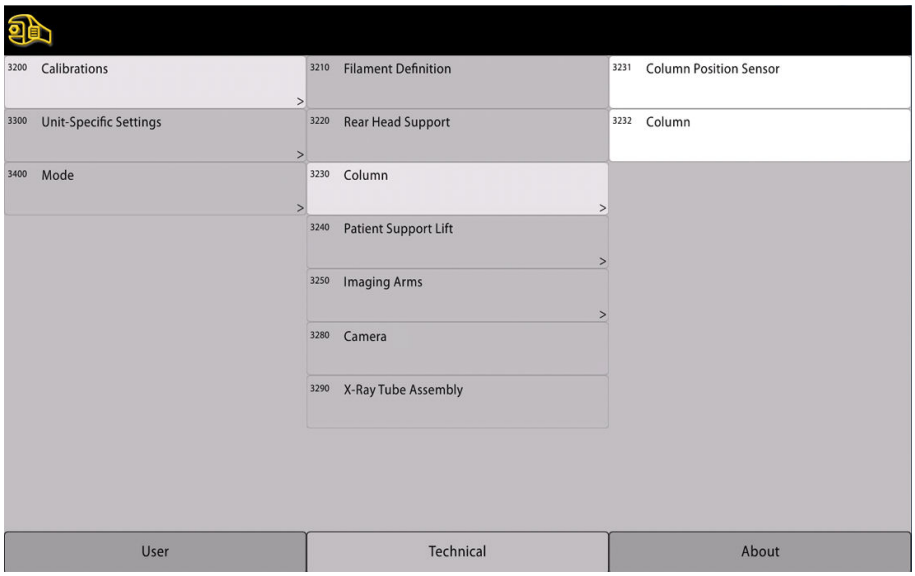

2. The following display appears.

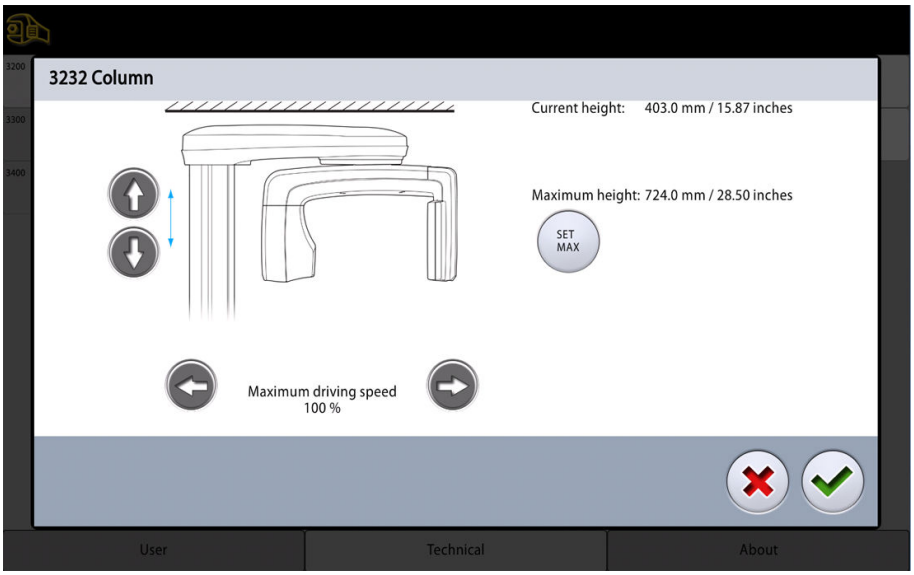

3. Set the desired maximum driving speed of column motor movement with the arrow buttons.
4. Exit the calibration mode by touching the green check mark button.

5.8 Patient support arm adjustments

5.8.1 Calibrating patient support position sensor

The patient support position sensor must be calibrated after the sensor is replaced.

1. Enter the calibration mode:
   1. Touch the service spanner on the **Main** display.
   2. Touch **Technical** and enter password (1701).
   3. Touch **Calibrations (3200)** and select **Patient support lift (3240)** and **Patient support lift position sensor (3241)**.

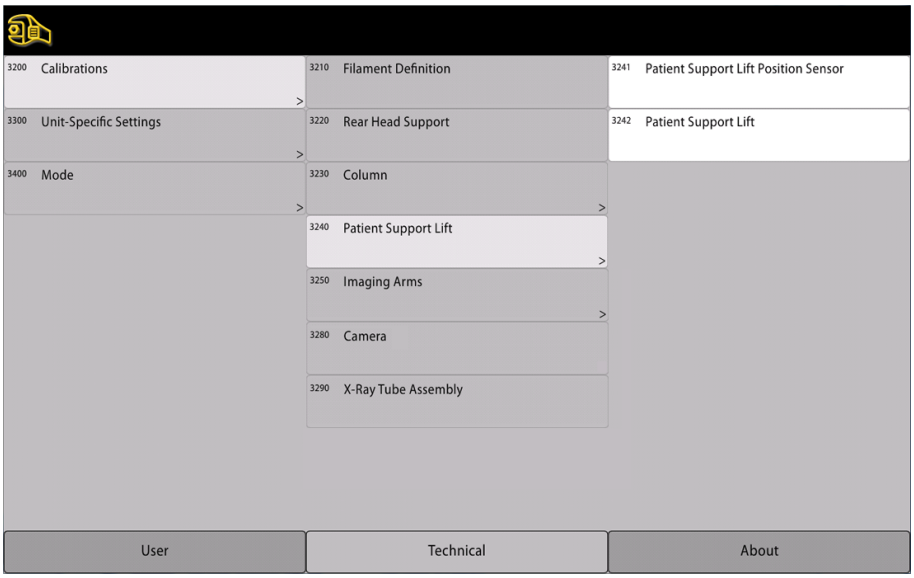

2. The following display appears.

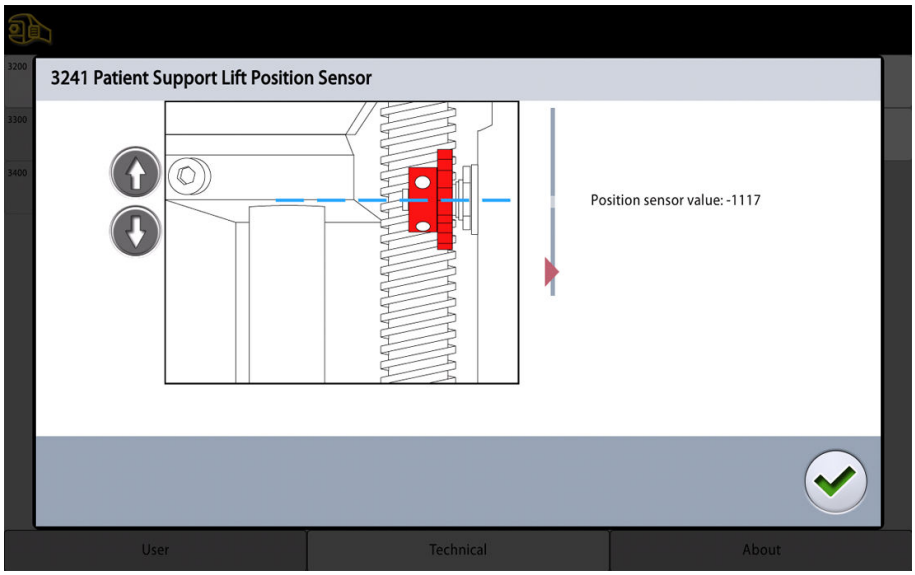

3. Drive the patient support with the height adjusting buttons so that the carriage block lower edge (white line in the figure below) is in line with sensor center point.
4. Check the **Patient support lift** field:
   - If the value in the field is **green**, the sensor is correctly calibrated.
   - If the value in the field is **red**, the sensor has to be calibrated, see the next step.
5. If needed, calibrate the patient support position sensor.
6. Loosen the two screws at the side of the cog wheel of the sensor with 2 mm Allen key.

7. Rotate the sensor until the value in the **Patient support sensor** field turns green (close to zero) in the **Patient Support** display.

8. Tighten the two screws at the side of the cog wheel of the sensor. Make sure that the cog wheel is correctly compared to the the worm screw (**2** on the figure below). If the cog wheel is too close to the worm screw **(1)**, the eccentricity of the axle damages the position sensor. If the cog wheel is too far from the threaded axle of the motor, the eccentricity of the axle causes the cog wheel to slip and loose position **(3)**.

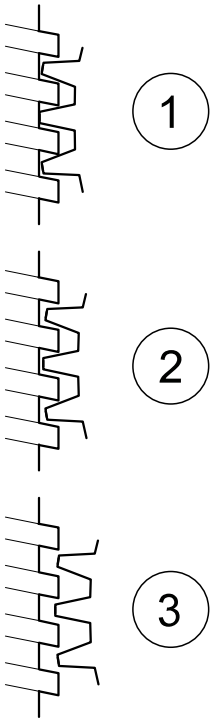

9. Exit the calibration mode by touching the green check mark button.
10. After the sensor calibration the distance between patient support table and sensor head must be checked, refer to section.

5.8.2 Adjusting patient support optical sensor

The optical sensor adjustment must be performed in either of the following situations:

- After the sensor is replaced
- If there are any problems when moving the patient support

Loosen the opto trigger attachment screw using 3 mm Allen key.

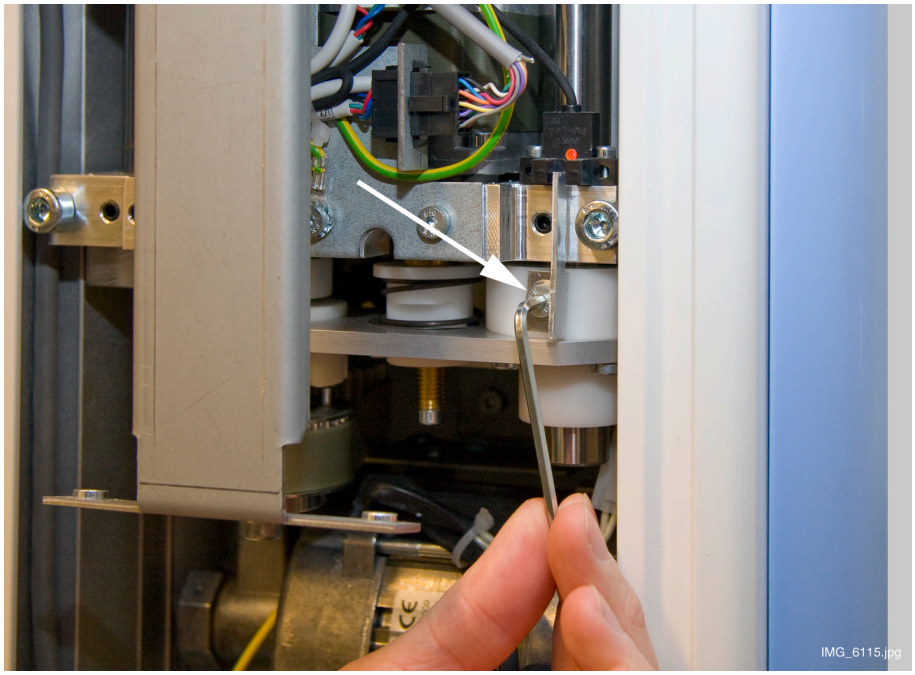

Rotate the step motor axle using 3 mm Allen key so that the distance between backup brake and clutch is approx. 1.5 mm (0.06 in.).

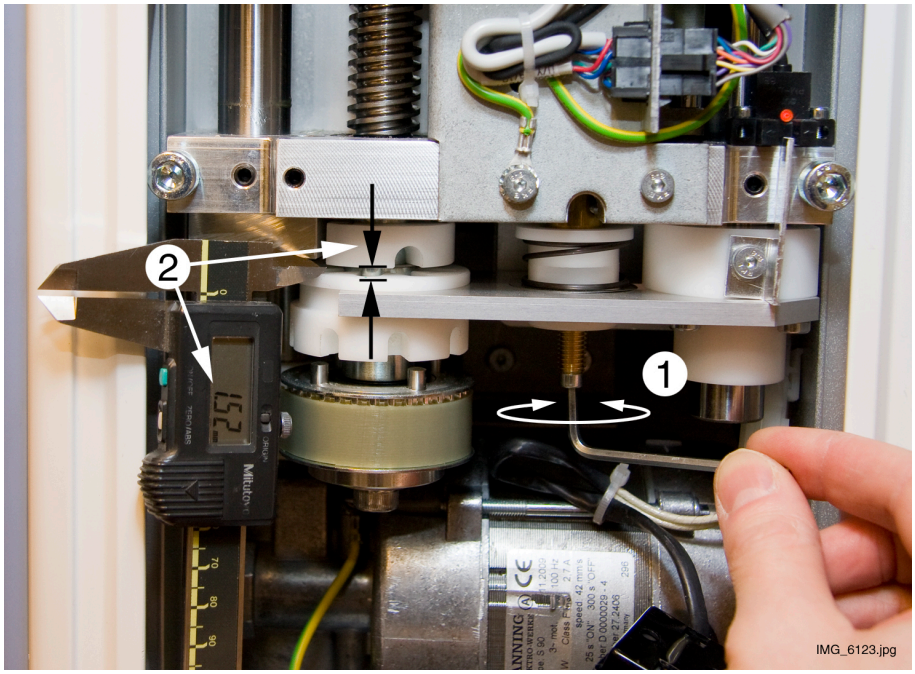

Adjust the opto trigger position so that the optical sensor LED just goes out. Tighten the attachment screw.

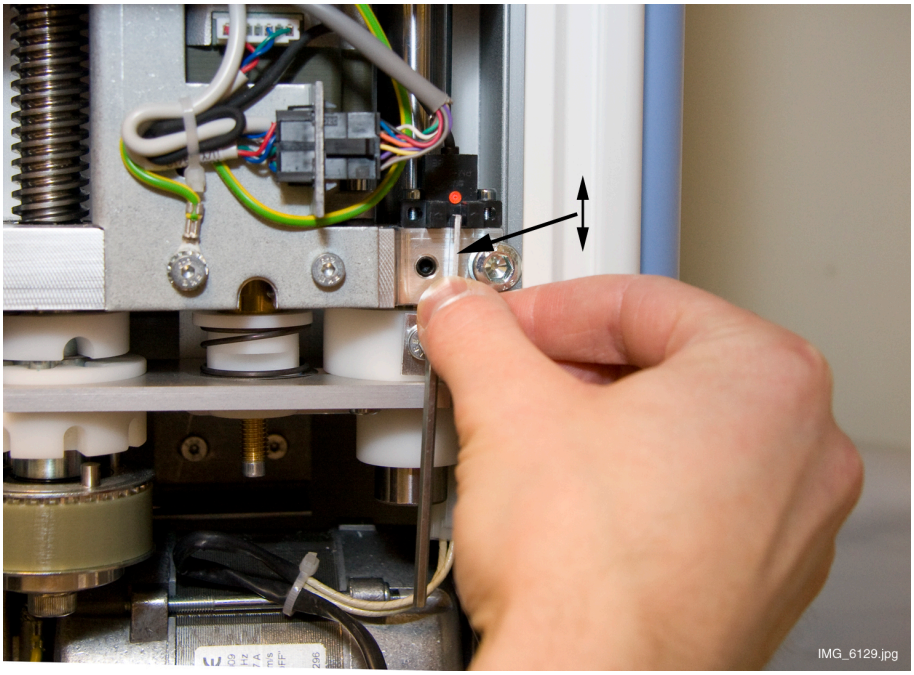

5.8.3 Adjusting patient support safety switch

The safety switch adjustment must be performed **either**:

- After the switch assembly is replaced
- If the help message **H149** or **H150** appears frequently

1. Loosen the assembly attachment screw using 3 mm Allen key.
2. Rotate the safety switch assembly so that the microswitches are located symmetrically around the trigger and touch the trigger, but the microswitch levers are released.

5.8.4 Adjusting lift screw

Planmeca Viso has friction pad to assist in adjustment of the patient support arm lifting screw.

The lift screw mechanism upper deck includes a friction pad, as well as a spring inside the upper deck's adjustment screw shaft to control the friction.

Adjust the lifting screw friction pad mechanism with care to avoid over-tightening.

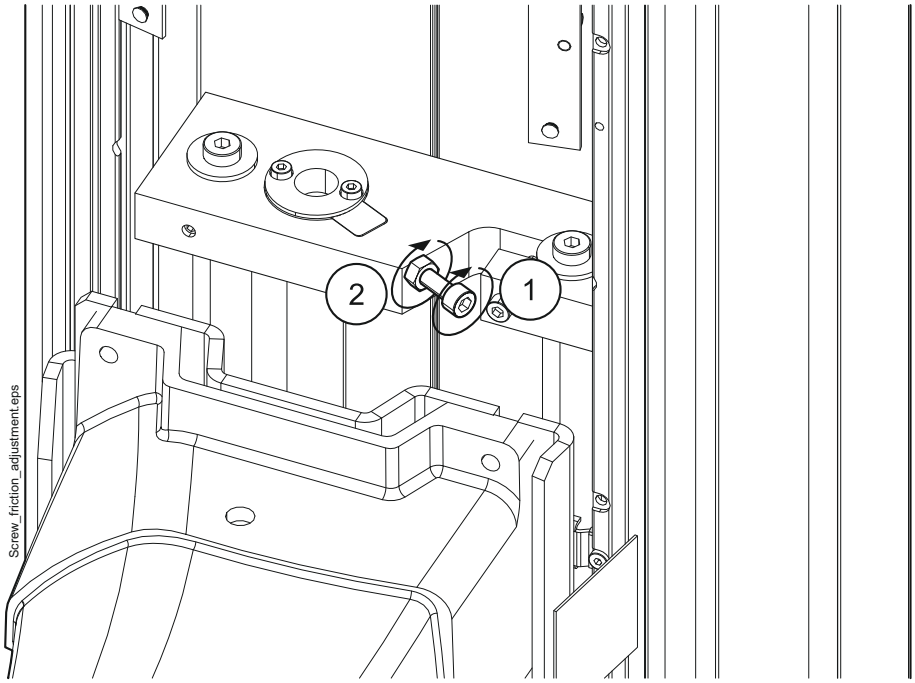

1. Tighten the adjustment screw by hand (1) until the spring inside is fully depressed.

   The spring depresses to its full extent and the adjustment screw cannot be easily tightened by hand.

CAUTION

Do not tighten using an Allen key or other tools, as over-tightening will cause damage to the friction pad or the screw threads.

1. Release the adjustment screw by a few turns, until the screw turns more freely but there is still some tension on the screw.
2. Tighten the locking nut by hand (2) against the mechanism base to hold the adjustment screw's position.

5.9 Patient support lift calibration

NOTE

Before calibrating the patient position mechanism, the patient support sensor calibration must be done, see instructions in section

1. Select **Technical** from the bottom of the display.

   The technical setting mode is password protected and the password is asked when the mode is entered for the first time after switching the unit on. The password is 1701.

2. Touch **Calibrations** (3200). Select **Patient support lift (3240)** and **Patient support lift (3242)**.

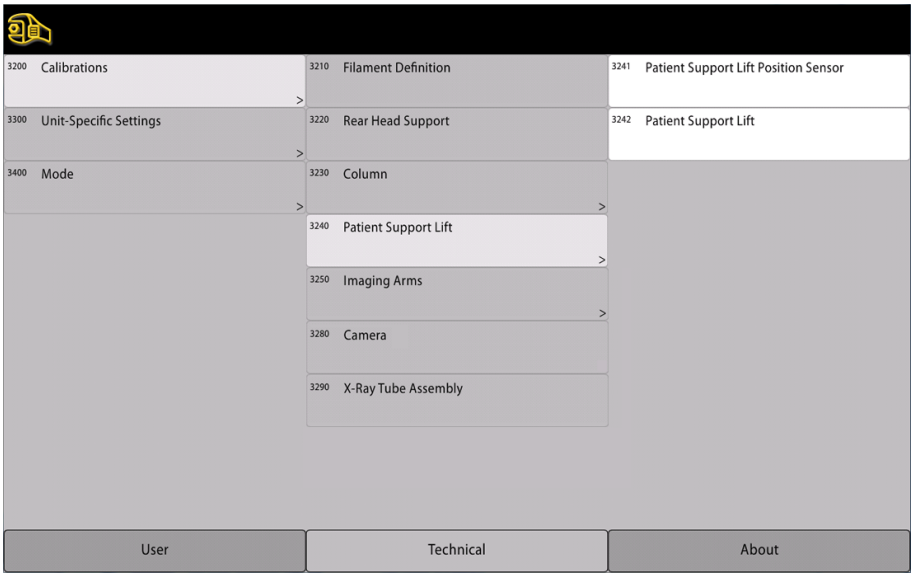

3. The following display appears.

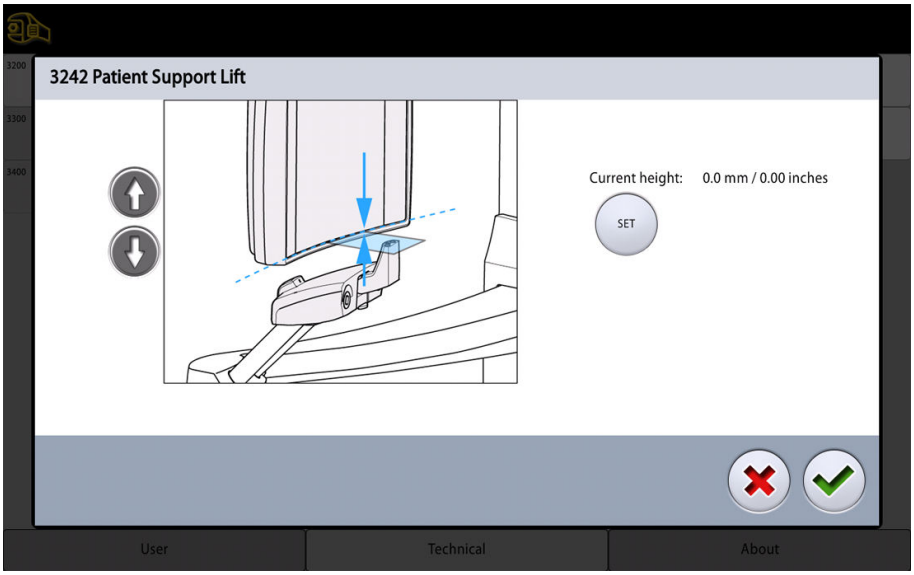

4. Move the C-arm to the position shown on the figure below. The patient support adapter upper edge must be level with the sensor lower edge **middle area**.

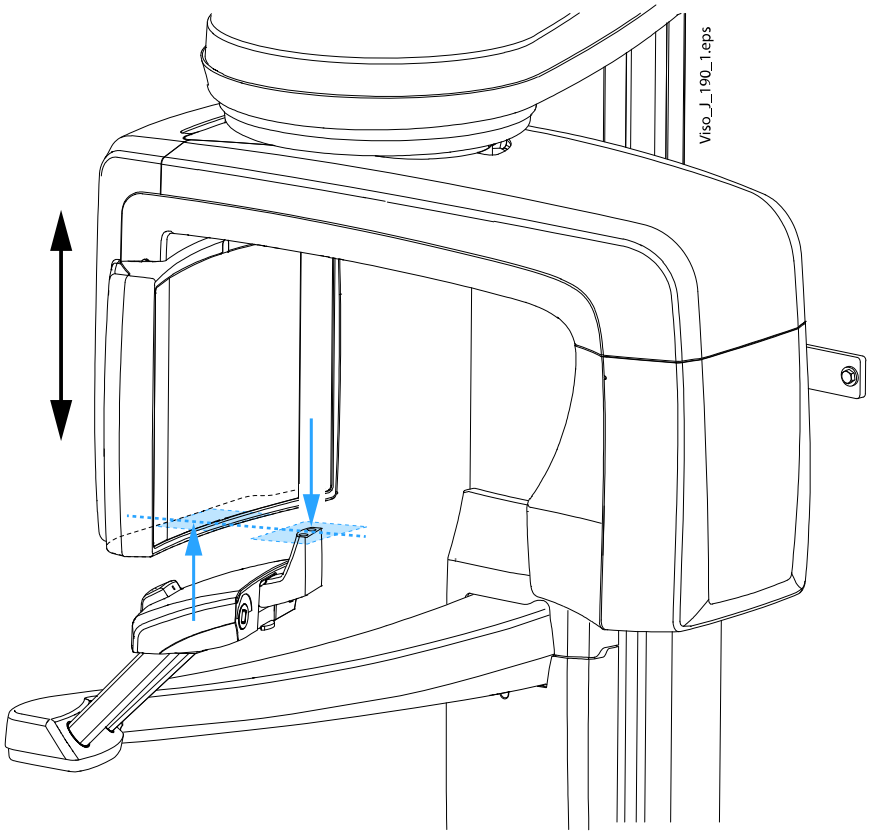

5. If needed, adjust the patient positioning mechanism height. Drive the patient positioning mechanism with up/down buttons until the patient support adapter upper edge is level with the line on the sensor head. Save the new value by touching the **SET** button. Exit the calibration mode by touching the green check mark button.

5.10 Imaging arm position sensors

5.10.1 Checking the imaging arm position sensors

1. Select **Technical** and enter password (1701).

2. Touch **Calibrations (3200)** and select **Imaging arms (3250)** and **Imaging arms position sensors (3251)**.

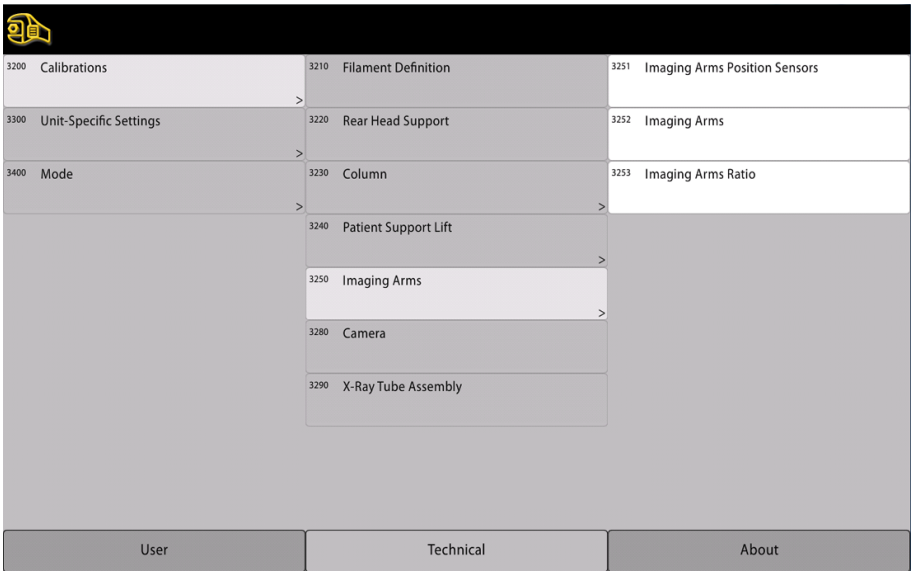

3. The following display appears.

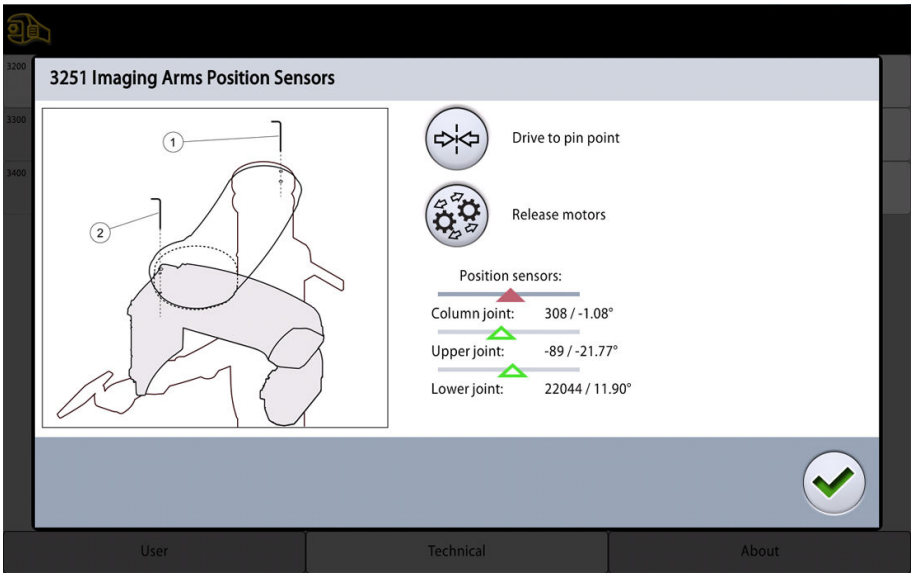

4. Drive the imaging arms to the calibration position by touching the **Drive to pin point** button. All the three arrows should be green. A red arrow means that the angle sensor in question is not correctly calibrated.

NOTE

Only the column joint position sensor can be adjusted. For the upper and lower joint position sensors only the automatic calibration is performed.

5. Remove the upper arm cover as described in section "Removing upper arm covers" on page 122.
6. Touch the **Release motor** button.
7. Move the upper arm to position shown on the figure below. Slide the alignment pin through the hole in the column joint so that it goes into the positioning holes in the upper arm and column **(1)**.

8. Move the C-arm and middle arm to the positions shown on the figure below. Slide the alignment pin through the hole in the upper joint so that it goes into the positioning hole in the C-arm **(2)**.

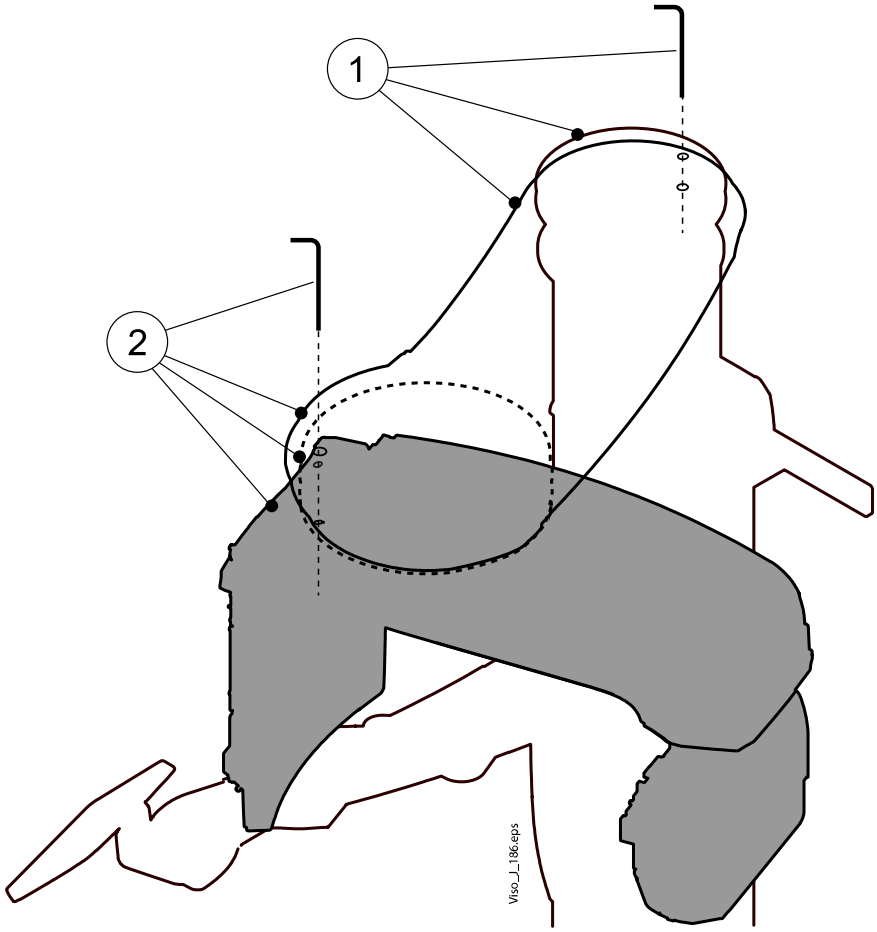

9. Check the arrows on the display. If the green arrow for the column joint position sensor cannot be reached with the pins in position, the sensor need to be adjusted. Refer to section "Adjusting column joint position sensor" on page 109.
10. Calibrate the angle sensors as described in section "Calibrating imaging arm position sensors" on page 107.

5.10.2 Calibrating imaging arm position sensors

NOTE

Do NOT calibrate the imaging arm position sensors after you have adjusted the C-arm rotation movement (section "Adjusting C-arm rotation movement" on page 90).

1. Select **Technical** and enter password (1701).

2. Touch **Calibrations (3200)** and select **Imaging arms (3250)** and **Imaging arms (3252)**.

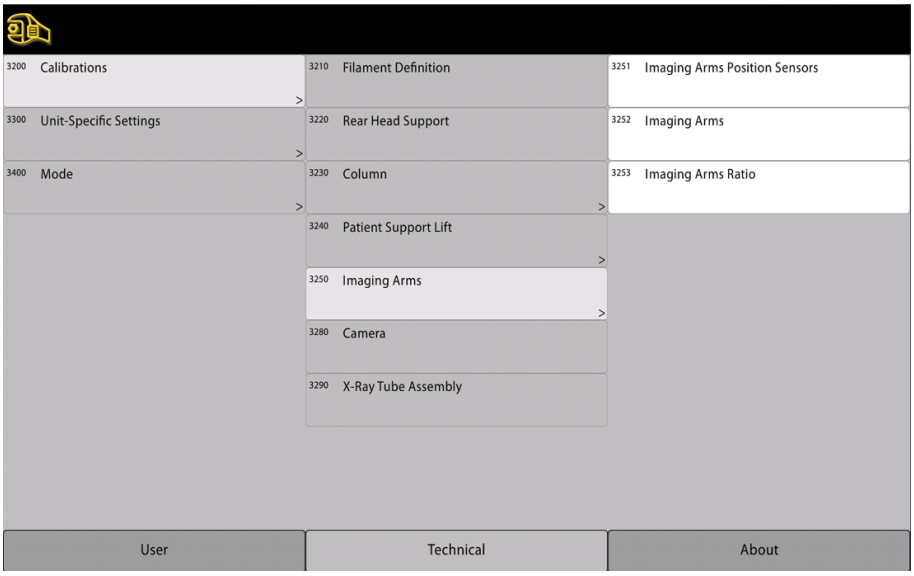

3. The following display appears.

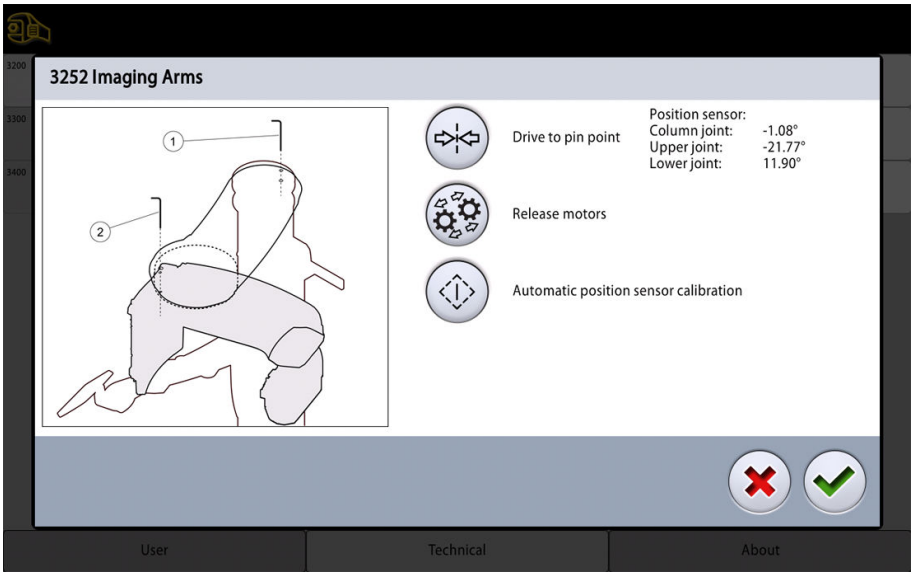

4. Remove the upper arm cover as described in section "Removing upper arm covers" on page 122.
5. Drive the imaging arms to the calibration position by touching the **Drive to pin point** button.
6. Touch the **Release motor** button.
7. Move the upper arm to position shown on the figure below. Slide the alignment pin through the hole in the column joint so that it goes into the positioning holes in the upper arm and column **(1)**.

8. Move the C-arm and middle arm to the positions shown on the figure below. Slide the alignment pin through the hole in the upper joint so that it goes into the positioning hole in the C-arm **(2)**.

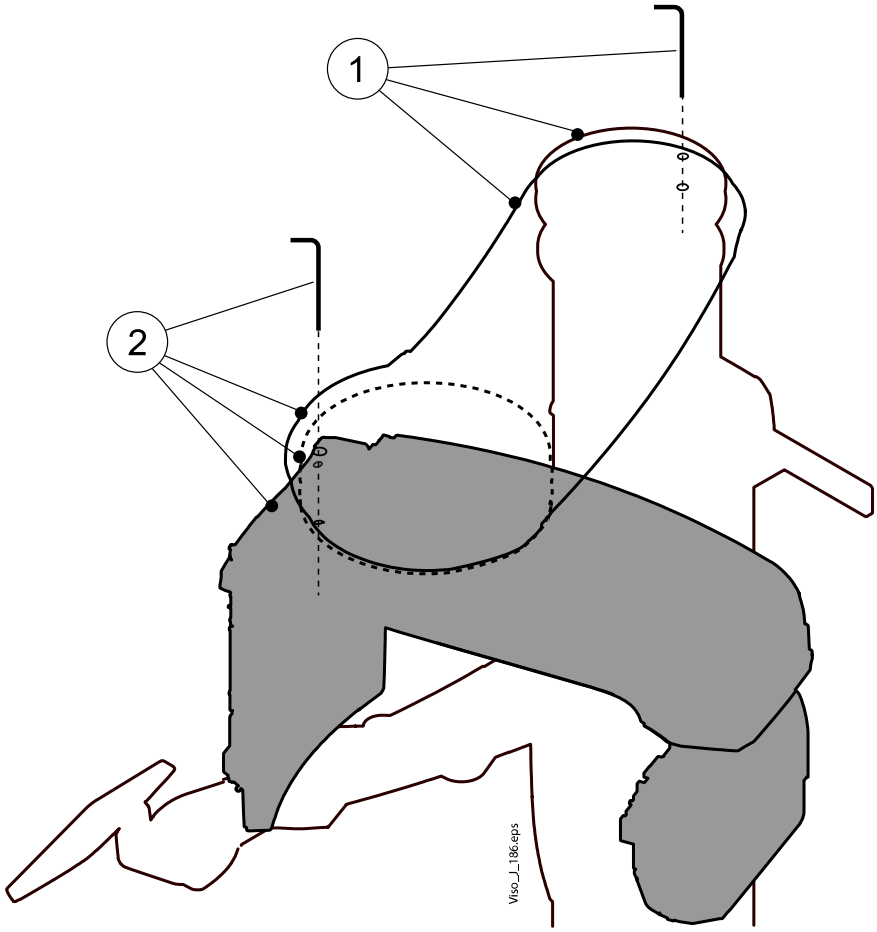

9. Lock the stepper motors by touching the blue **Release motors** button.
10. After locking the motors remove the alignment pins and calibrate the position sensors by touching the **Automatic position sensor calibration** button.
11. The position sensors are now calibrated.

    Check the values and arrows on the display. They should all be green.

    If the green arrow of the column joint position sensor cannot be reached with the pin in the position, the sensor need to be adjusted. Refer to section "Adjusting column joint position sensor" on page 109.
12. Exit the calibration mode by touching the green check mark button.

5.10.3 Adjusting column joint position sensor

1. Loosen the attachment screw of column joint angle sensor coupling with 1.5 mm Allen key (1).

2. Lift the sensor coupling up (2) and rotate the angle sensor axle (3) until the green value appears on the display.

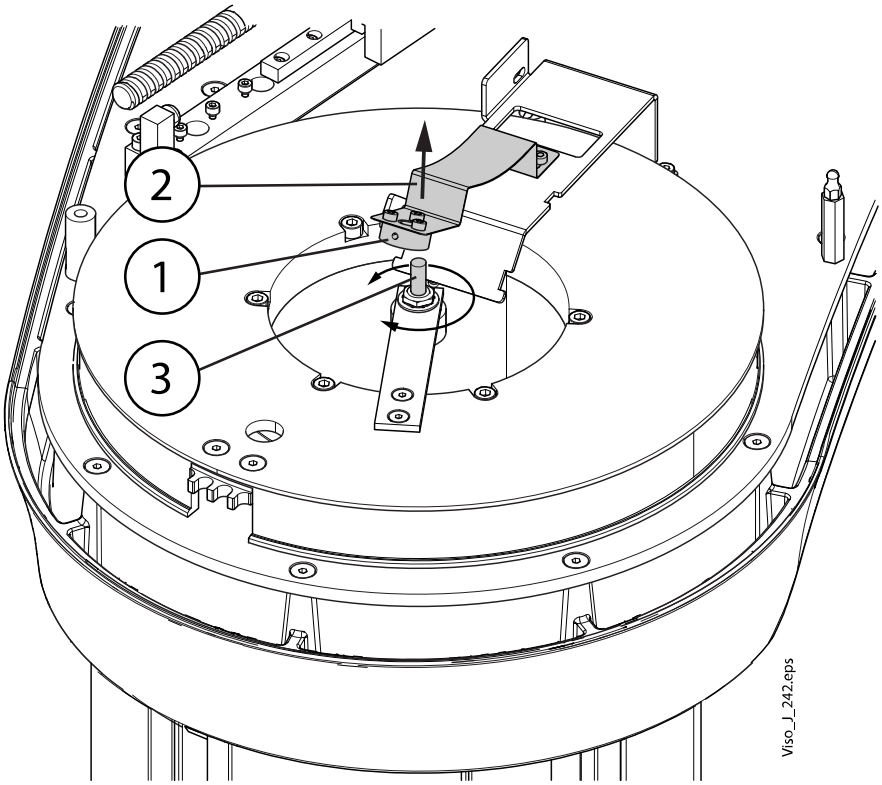

3. Reattach the sensor coupling. Make sure that the sensor coupling does not touch the sensor body.
4. Perfrom the automatic position sensor calibration.

5.11 Patient support base adjustment

Attaching calibration tools

1. Remove the tube assembly covers and the lower cover of the C-arm as well as the upper arm cover. Refer to section "Removing covers" on page 122.
2. Remove the cover of the patient support table, refer to section "Removing patient support covers" on page 130.
3. Remove tube head front covers, see section "Removing C-arm covers" on page 124.
4. Attach the Ball phantom to the patient positioning mechanism adapter.
5. Enter the calibration mode: Touch the service spanner on the **Main** display. Touch **Technical** and enter password (1701). Touch **Calibration** (3200) and select **Imaging Arm (3250)**.
6. Touch the Drive to pin point button.
7. Switch off the X-ray unit.

8. Attach the ruler to the collimator.

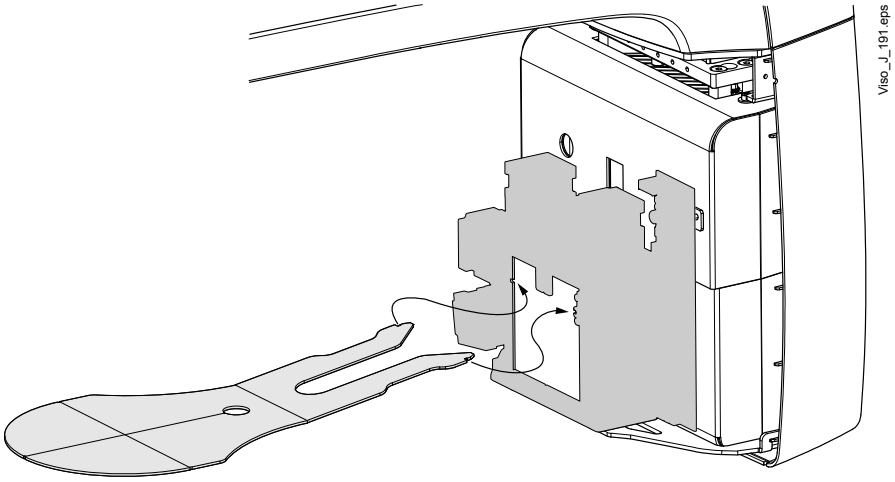

Adjustment

1. Move the upper arm to position shown on the figure below. Slide the alignment pin through the hole in the column joint so that it goes into the positioning holes in the upper arm and column **(1)**.
2. Move the rotating tube assembly to the position shown on the figure below. Slide the alignment pin through the hole in the C-arm so that it goes into the hole in the tube assembly **(2)**.
3. Move the C-arm and middle arm to the positions shown on the figure below. Slide the alignment pin through the hole in the middle joint so that it goes into the positioning hole in the C-arm **(3)**.

4. The x-line on ruler must coincide with the rear x-line on the ball phantom **(4)**.

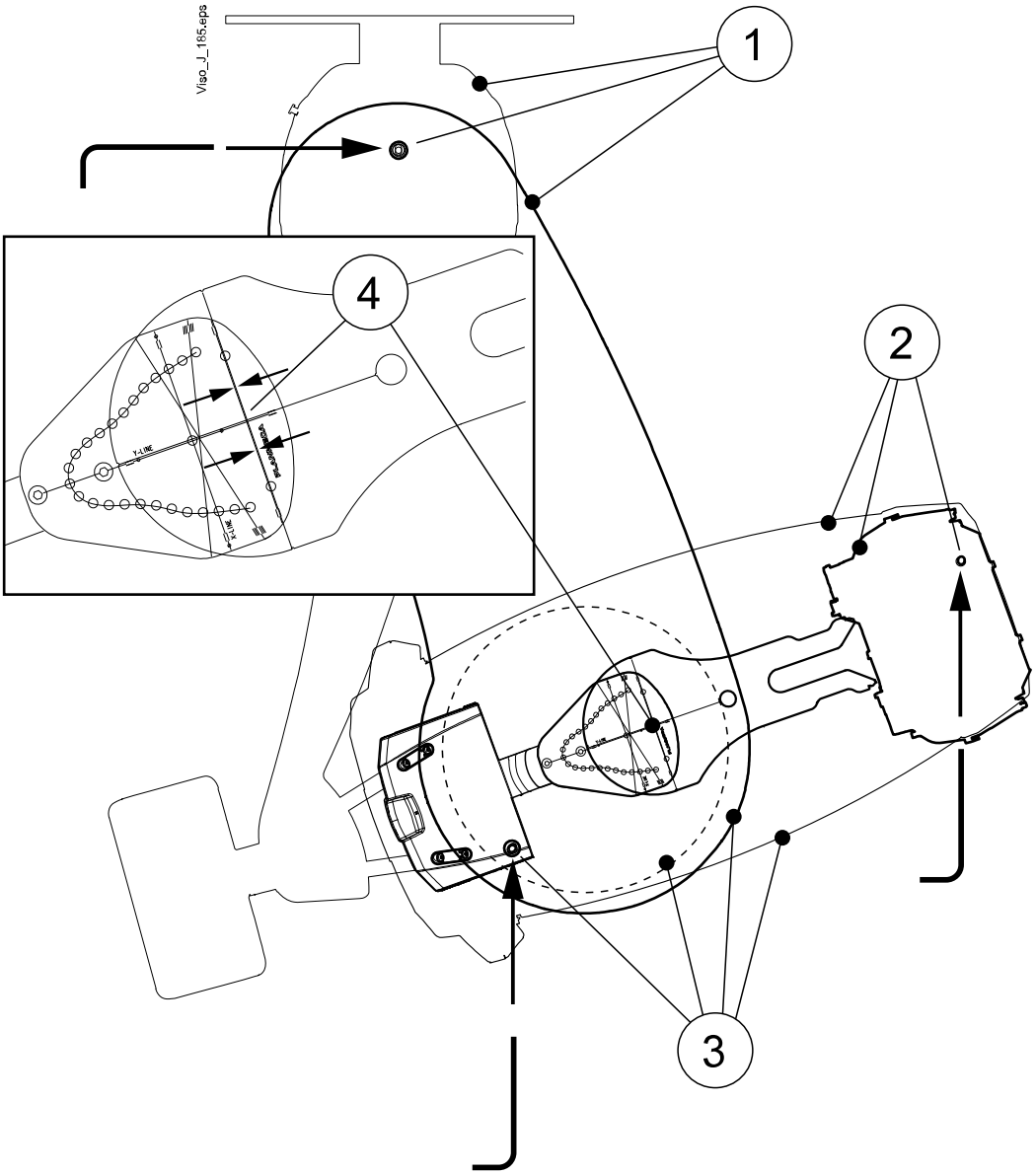

5. If the lines do not coincide, you will have to adjust the position of the patient support base. Loosen three patient support base attachment screws (1) and adjust the position (2). Tighten the attachment screws.

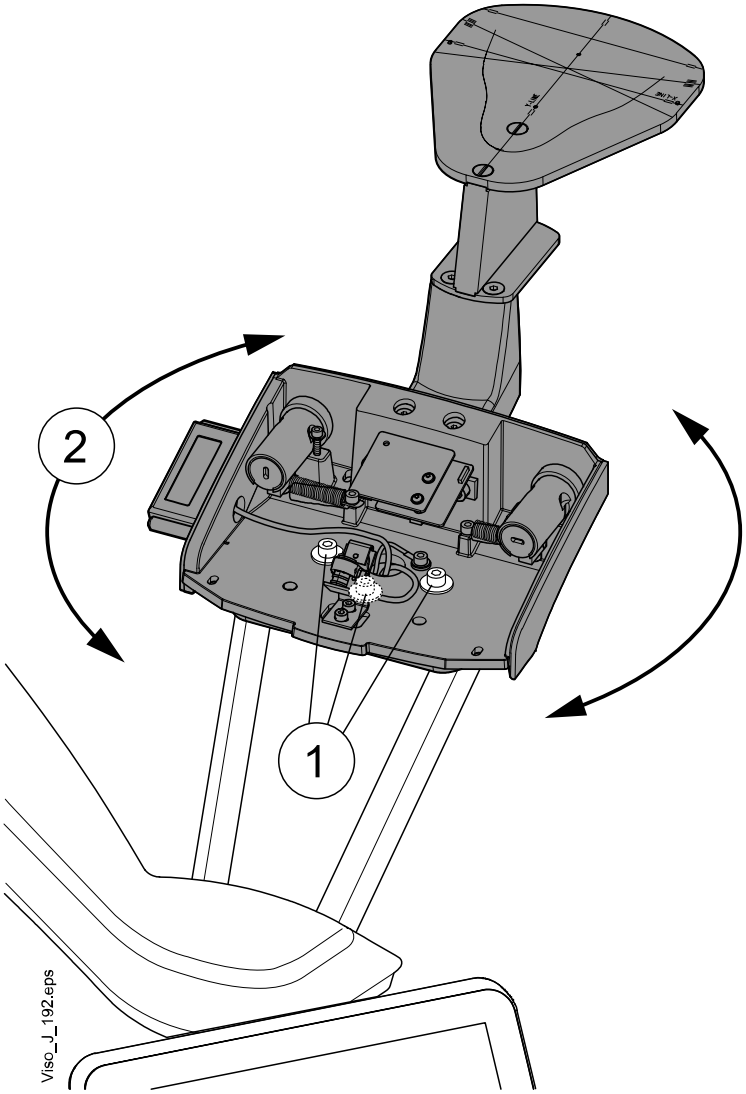

5.12 Patient support midsagittal laser adjustment

The midsagittal laser light should strike the black line on the front of the ball phantom. Also make sure that the light is not limited by the patient support base cover.

Attach the ball phantom to the patient positioning mechanism adapter and check the laser light position. Adjust the light, if necessary.

Remove the patient support base cover.

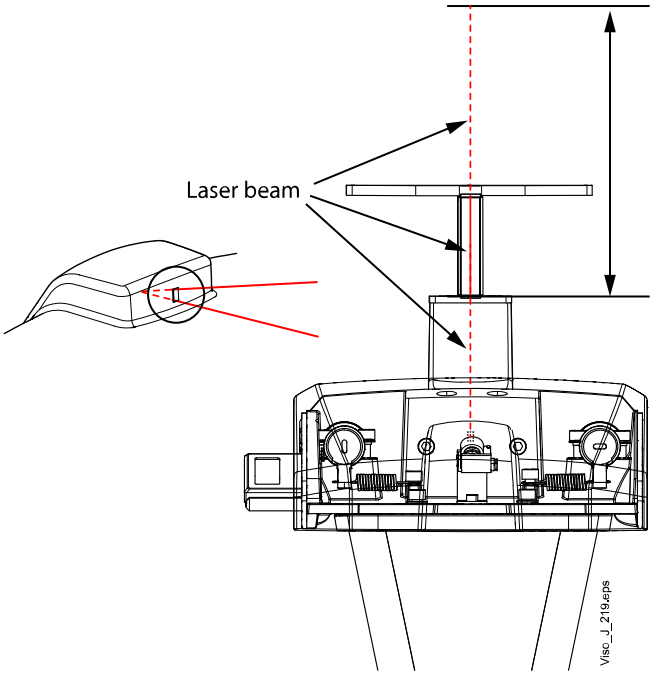

1. To adjust the light beam horizontal position loosen the assembly attachment screws and move the assembly.
2. To adjust the light beam angle loosen the securing screw and rotate the lens assembly.
3. To adjust the light beam horizontal position loosen the attachment screw of the laser light assembly and rotate the assembly.
4. To adjust the light vertical position loosen the attachment screw of the laser light assembly and rotate the assembly.
5. To focus the light beam adjust the depth of the lens assembly.

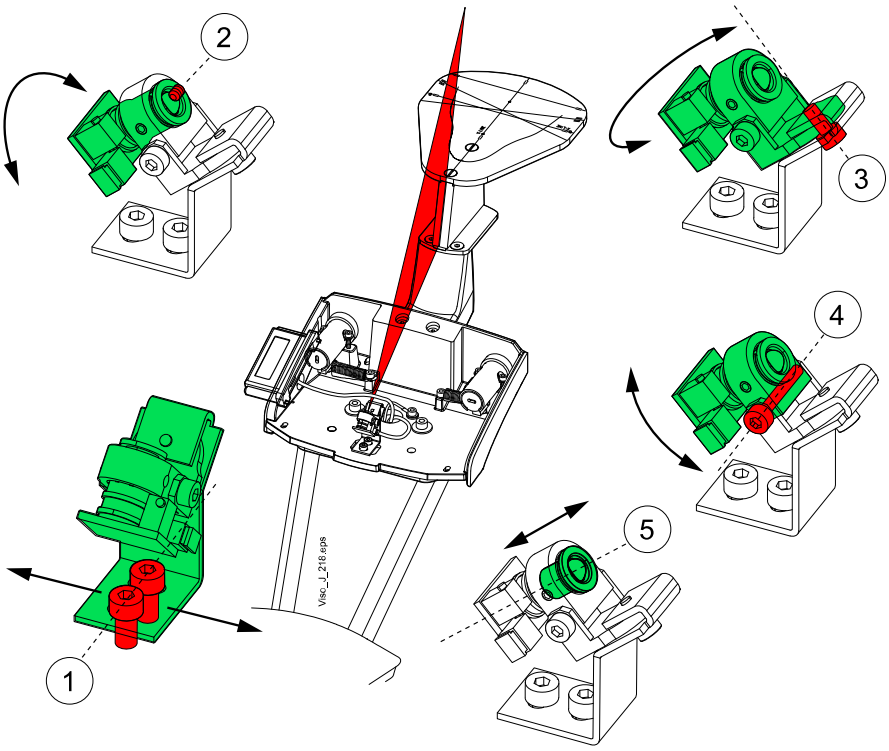

5.13 Adjusting patient support bars

Adjust the patient support bars symmetrically so that the top head support sits firmly on top of the bars.

1. Insert the patient support bars to the patient support base.
2. Remove the patient support base cover.

3. Adjust the position of support bars with the adjustment screws (1-4). E.g. loosening the screw (1) and tightening the screw (2) will move the the right support bar outwards.

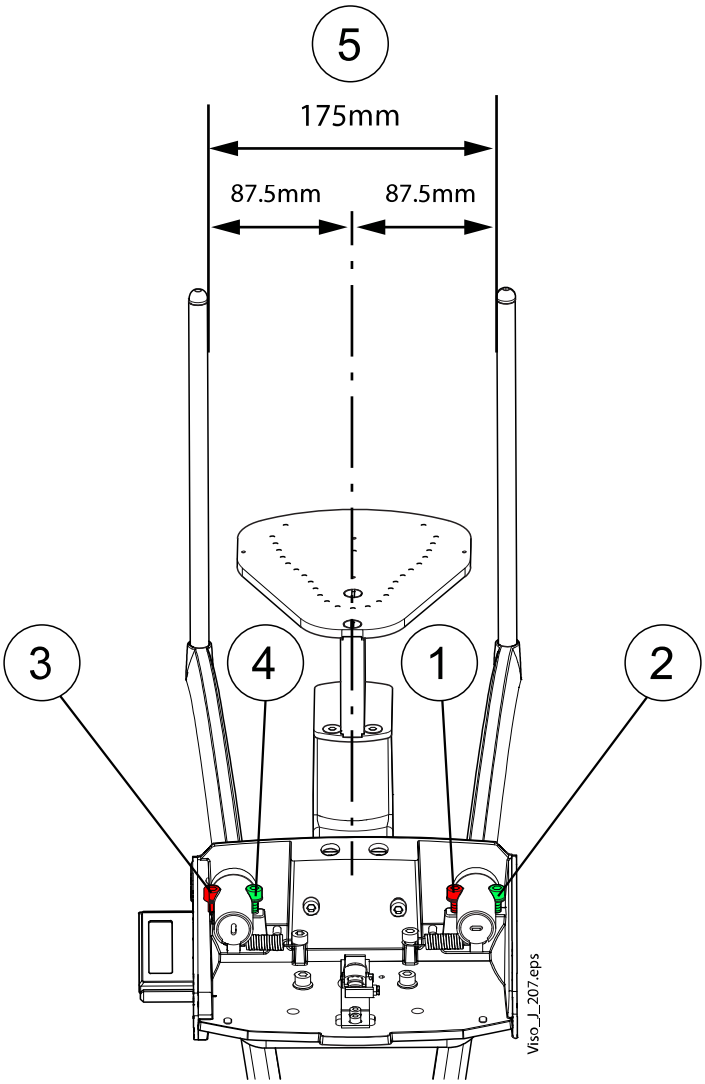

5.14 Patient rear head support calibration

The rear head support should be centred in the patient camera image. Adjust the rear head support and calibrate according to the directions on the touch screen.

Enter calibration mode:

- Touch the service spanner on the **Main** display.
- Touch **Technical** and enter password (1701).
- Touch **Calibrations (3200)** and select **Rear head support (3220)**.

The following display appears.

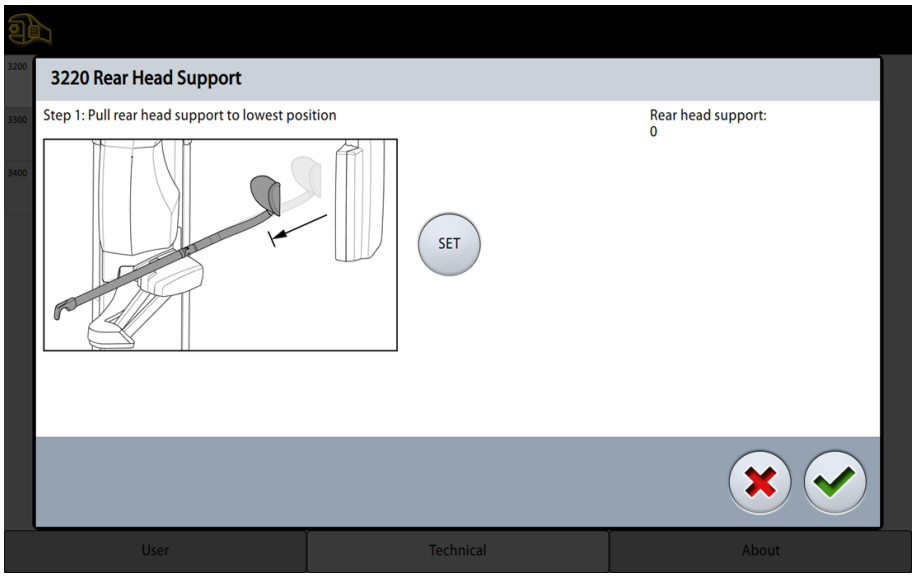

Pull the rear head support to its lowest position.

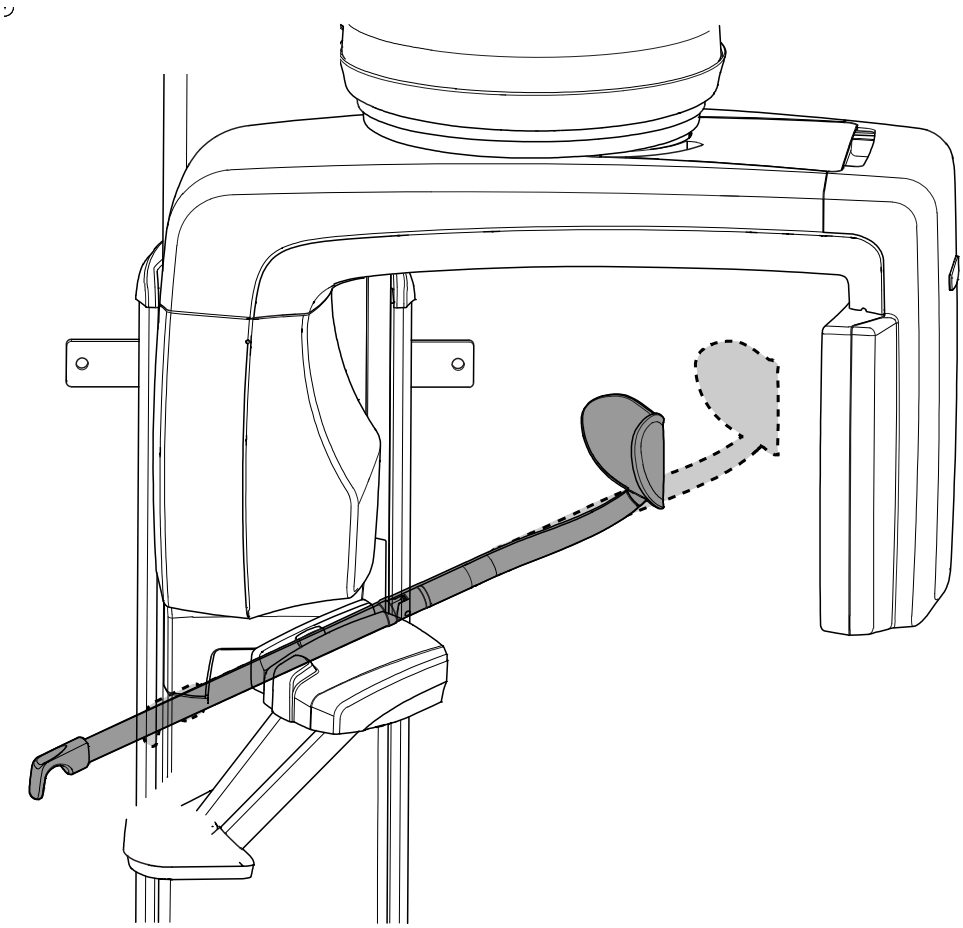

Touch the **SET** icon.

Push the rear head support to its highest position and touch the **SET** icon.

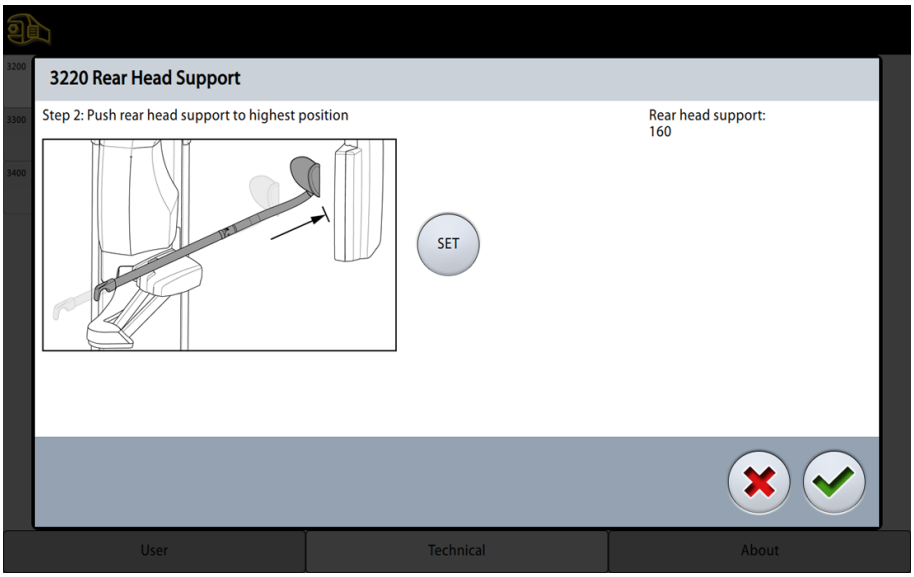

The rear head support is now calibrated. Exit the calibration mode by touching the green check mark button.

5.15 Patient camera calibration

Enter the calibration mode:

1. Touch the service spanner on the **Main** display.
2. Touch **Technical** and enter password (1701).
3. Touch **Calibrations (3200)** and select **Camera (3280)**. The **Camera** display appears.

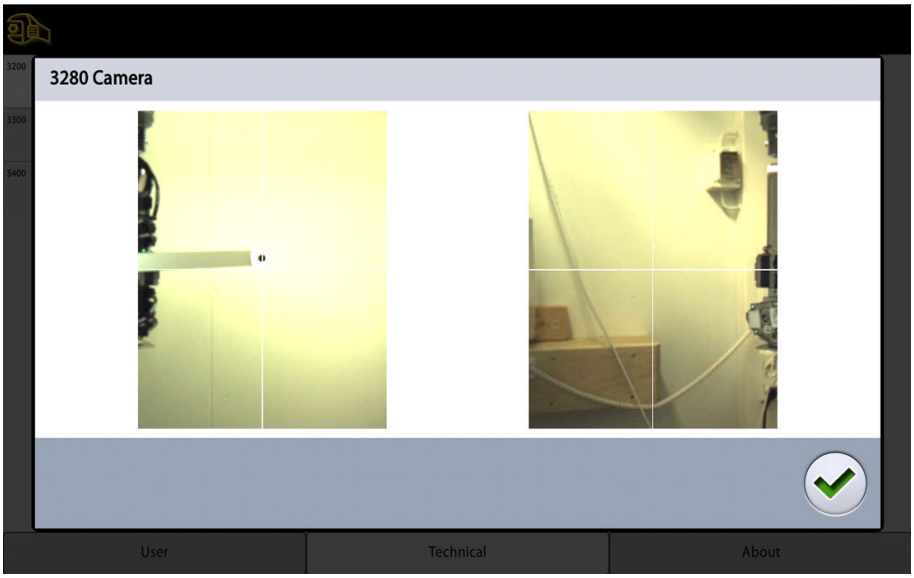

Install the camera ruler on the front of the X-ray tube as shown in the images below.

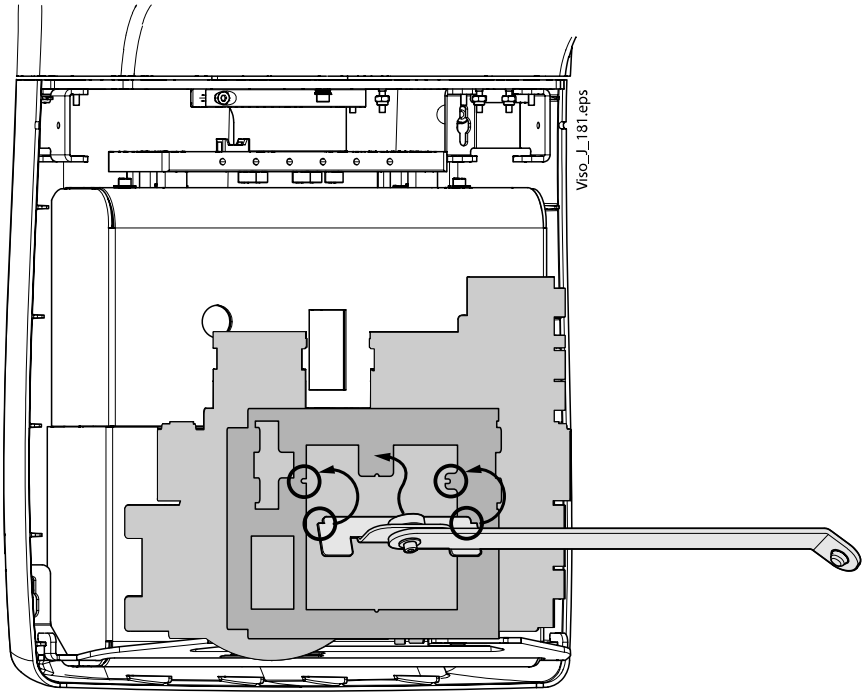

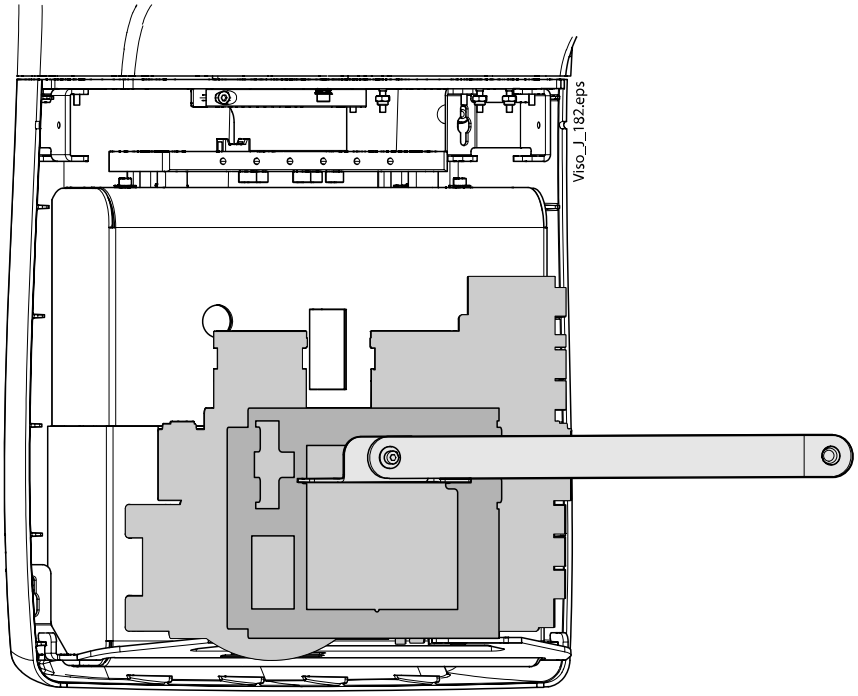

Lock the lower rim of the calibration phantom to the X-ray tube in the position shown, and then push the upper edge of the calibration phantom into place so its magnet locks in position and the phantom is vertical.

Set the arm of the calibration phantom to one side as shown.

Align the calibration phantom arm's end (**1**) with the centrepoint of the right camera assembly on the sensor opposite.

Move the camera assembly vertically and horizontally until the camera points the ruler target (**2**, **3**).

The touch screen shows the camera perspective (**4**).

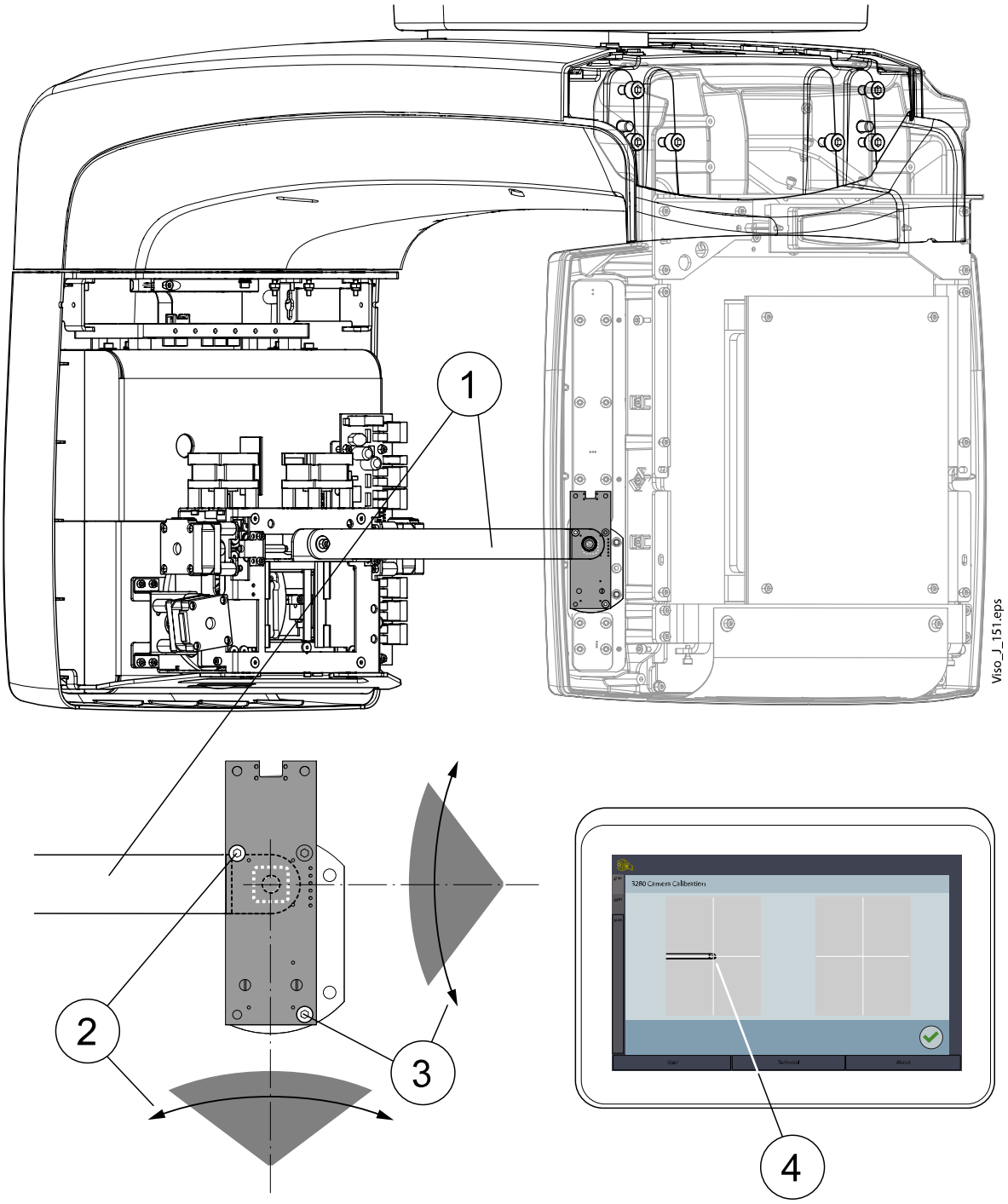

Rotate the calibration phantom arm (1) and repeat the process with the left camera assembly (**2**, **3**, **4**).

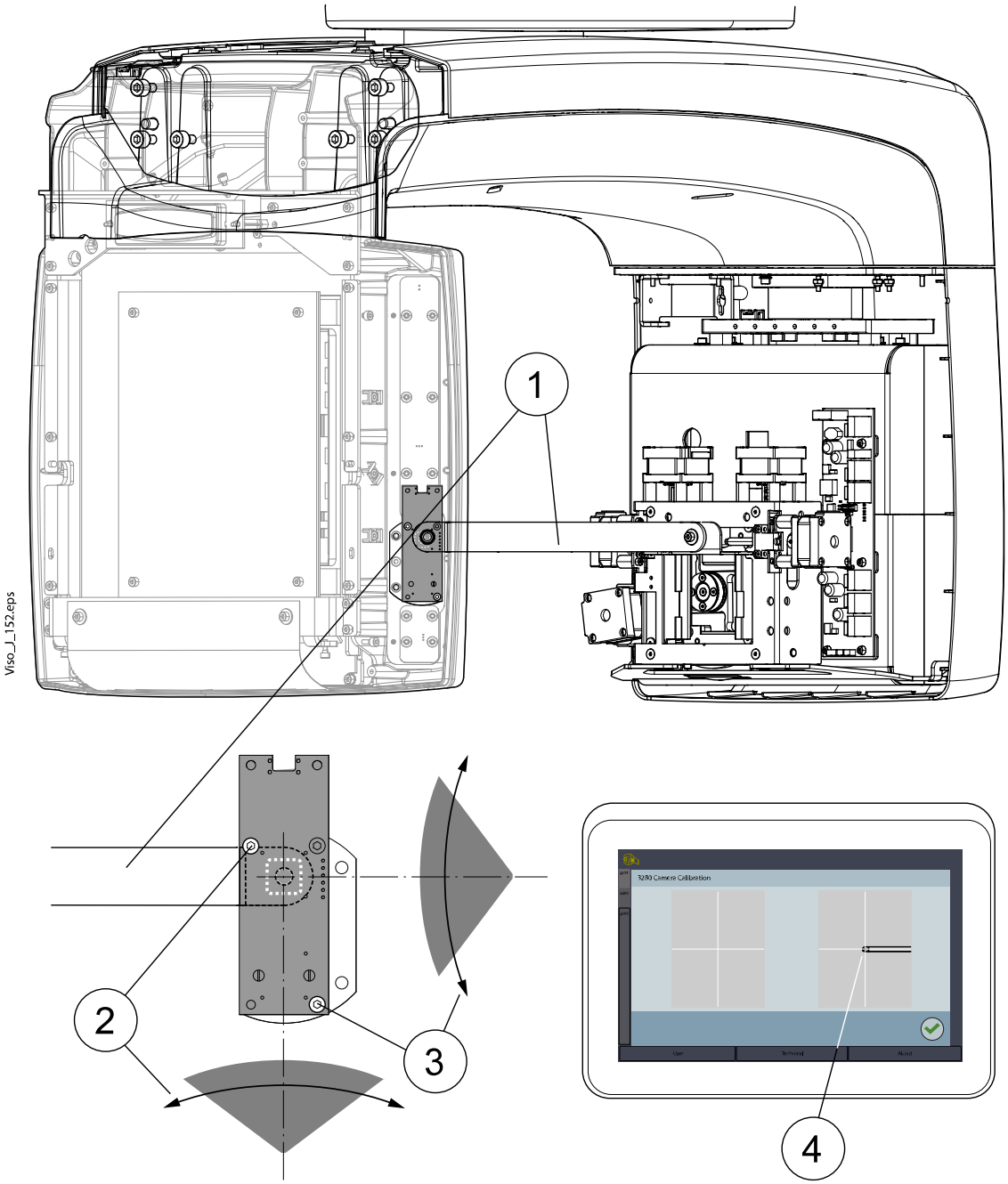

6 Parts replacement

6.1 Removing covers

6.1.1 Removing upper arm covers

Removing upper arm top cover

The upper arm top cover is attached to the upper arm with three attachment screws and three easy-attachment clips.

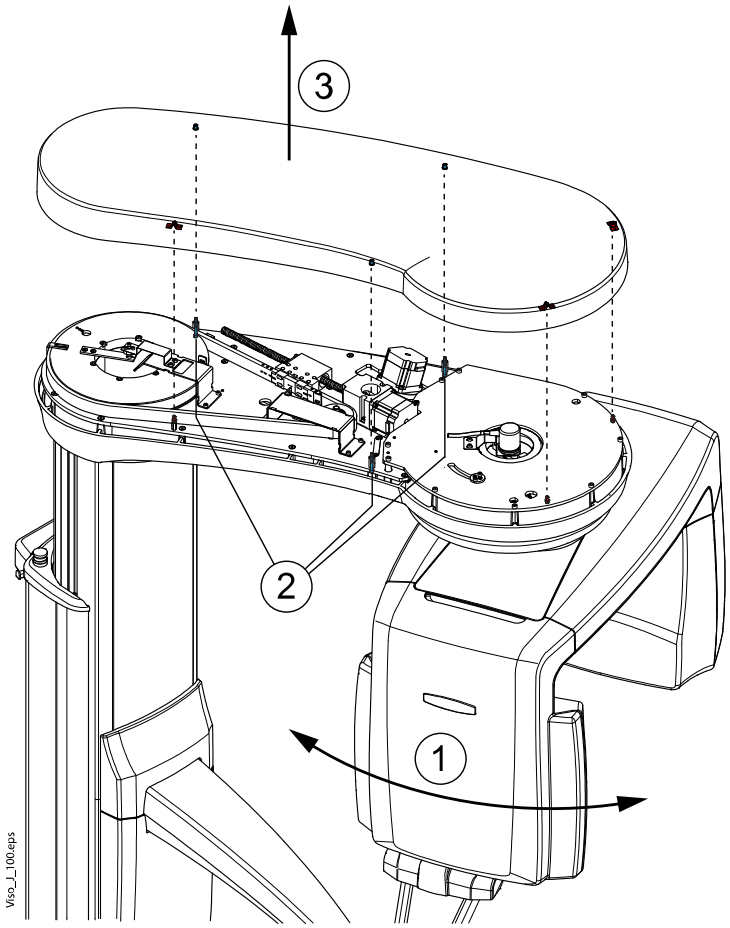

1. Rotate the C-arm into position to enable cover release (**1**).
2. **Unscrew** the three screws that attach the upper cover to the C-arm (**2**).

   The screws are designed to remain in place for ease of reattachment.
3. Remove the upper arm top cover from its clips and lift it away (**3**).

Replacing the upper arm top cover

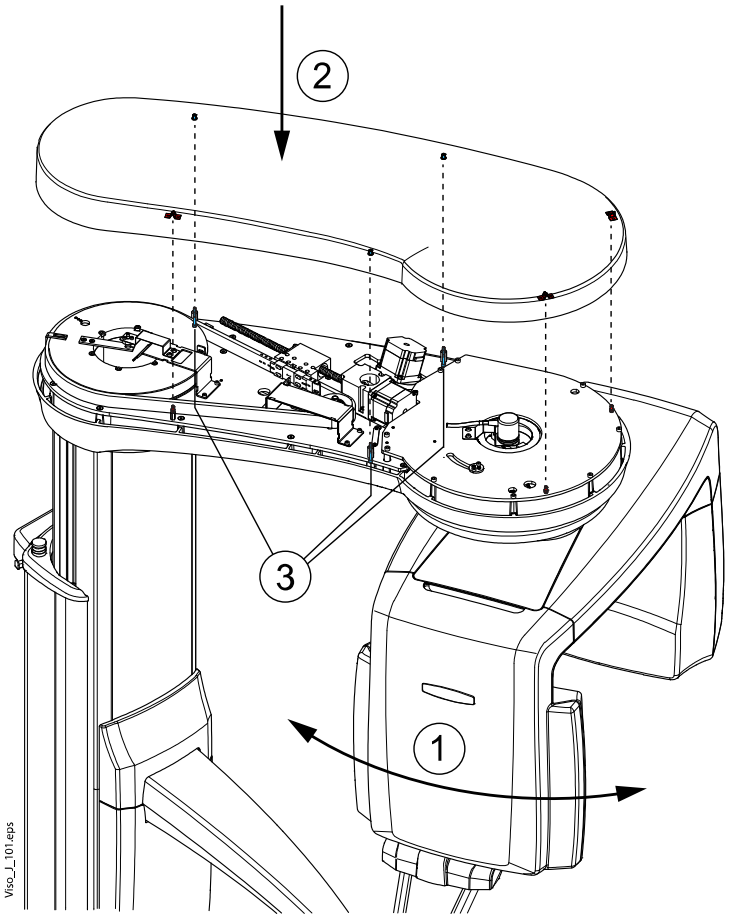

Replace the cover by moving the C-arm into position (**1**), putting the cover in place and securing its clips (**2**), and refastening the screws (**3**).

6.1.2 Removing C-arm covers

Removing C-arm top plate

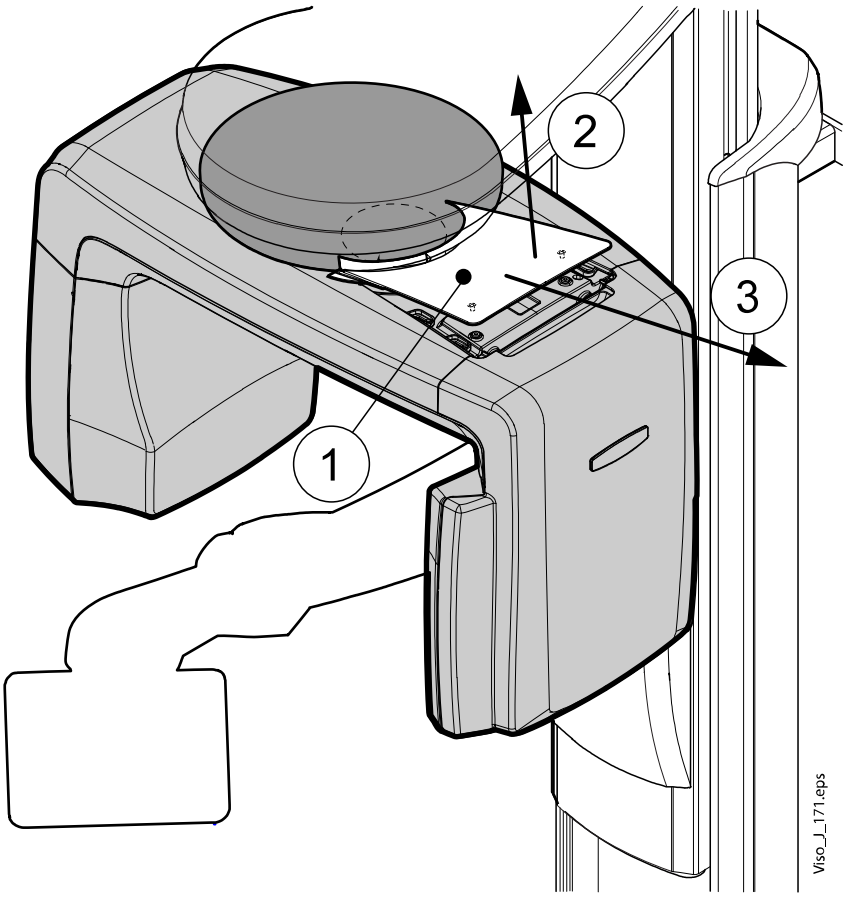

1. Move the C-arm into a position where the top plate is accessible (**1**).

   The middle arm rotating joint connecting the upper arm to the C-arm rotates and turns on two semi-independent axles. Adjust the middle arm so the top plate is optimally exposed.
2. Raise the outer edge of the top plate (**2**).
3. Bend the edges of the top plate inwards slightly to facilitate removal.
4. Pull the top plate away (**3**).

Removing C-arm top cover

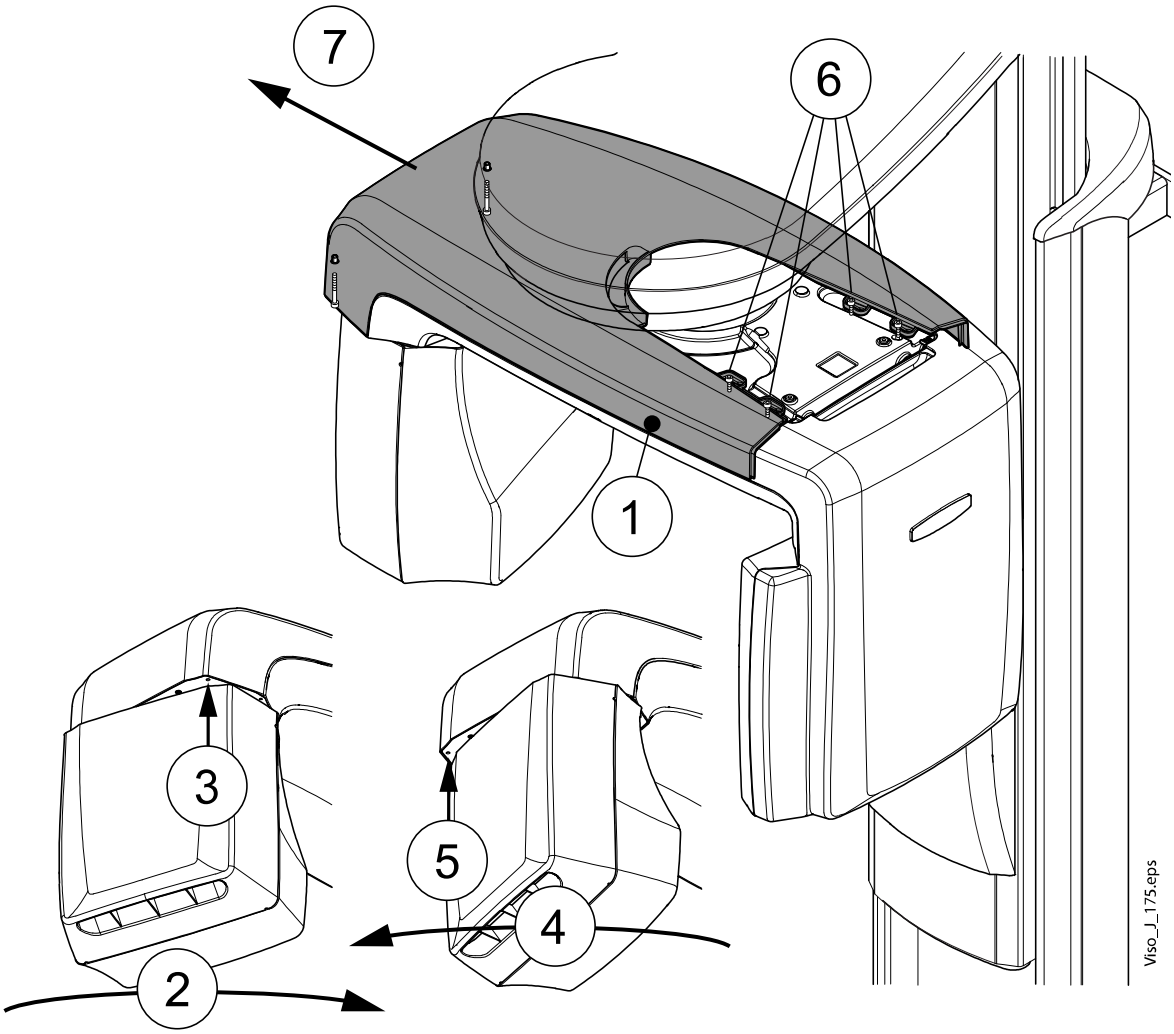

1. Make sure the C-arm and middle arms rotated into an accessible position (**1**)and the C-arm top plate is removed.
2. Rotate the X-ray tube (**2**) to access the left attachment screw (**3**). Loosen the attachment screw.
3. Rotate the X-ray tube (**4**) to access the right attachment screw (**5**). Loosen the attachment screw.
4. Loosen the four attachment screws (**6**).
5. Slide the top cover off (**7**).

Removing sensor back cover

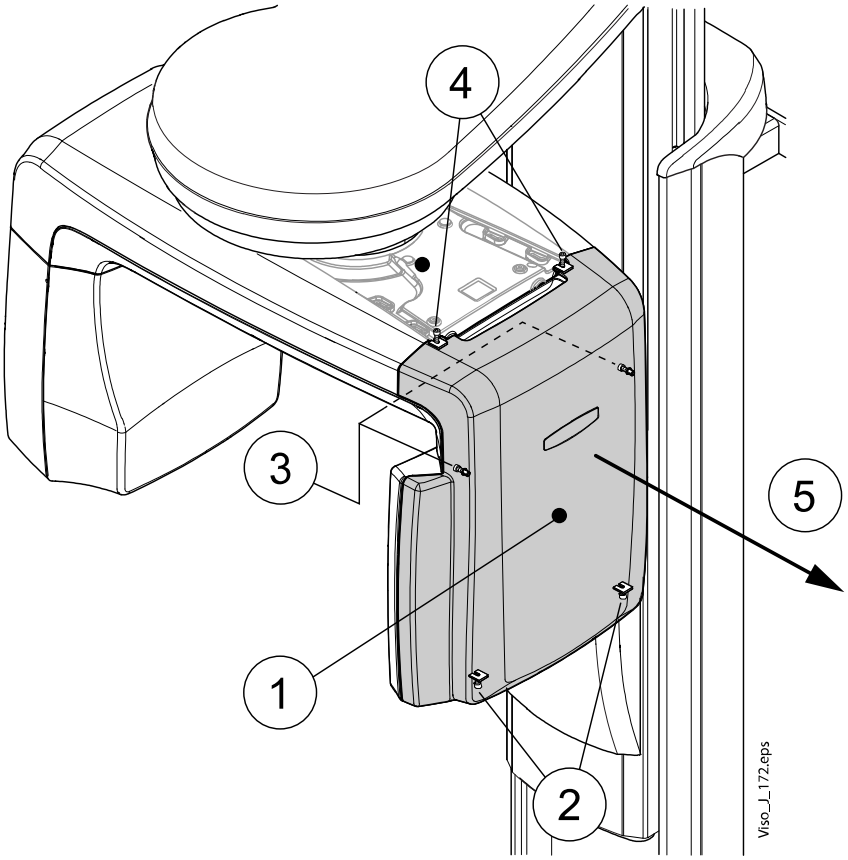

Remove the C-arm top plate before removing the sensor back cover.

1. The sensor back cover is attached to the sensor frame with six attachment screws (**1**).
2. Loosen the two bottom screws approximately three turns, but do not unscrew completely (**2**).
3. Loosen the two screws on the inside (front) surface of the sensor (**3**).
4. Loosen the two top screws approximately three turns, but do not unscrew completely (**4**).
5. Remove the back cover (**5**).

Removing X-ray tube head front cover

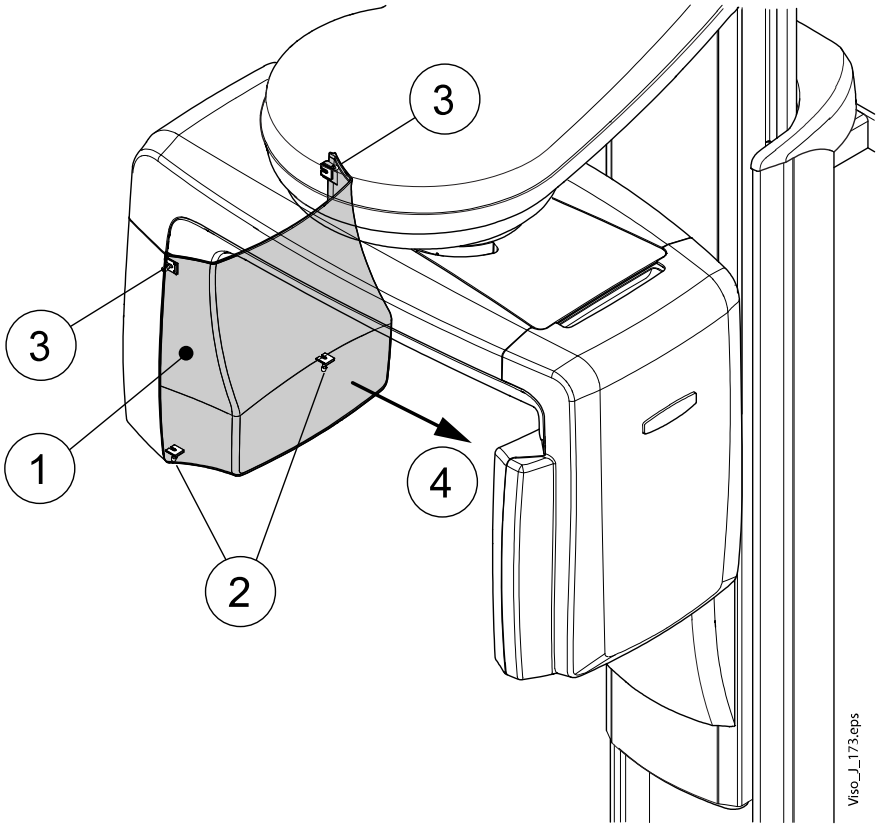

1. Rotate the X-ray tube head so it is flush with the C-arm (**1**).
2. Loosen the two attachment screws at the bottom (**2**) and the two attachment screws at the sides of the front cover (**3**).
3. Pull the front cover outwards from the X-ray tube head (**4**).

Removing X-ray tube head rear cover

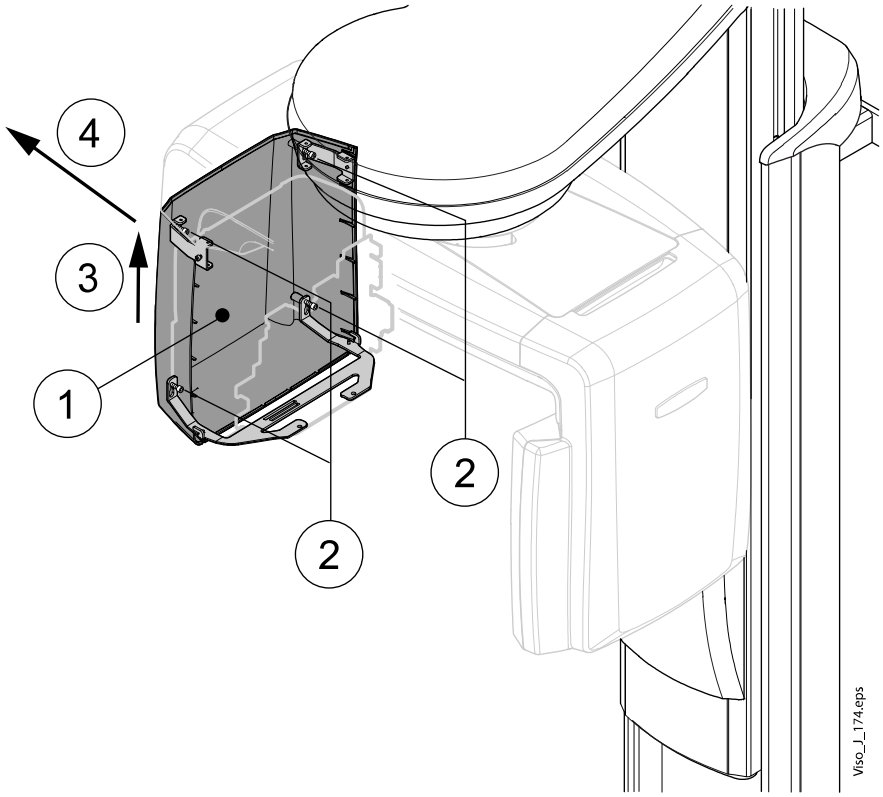

1. Rotate the X-ray tube so it is flush with the C-arm (**1**).
2. Loosen the four attachment screws on the bottom and sides of the rear cover (**2**). Remove the cover from the X-ray tube head (**3 and 4**).

Removing C-arm bottom cover

Remove the following covers before removing the C-arm botton cover:

1. C-arm top plate
2. C-arm top cover
3. Sensor rear cover
4. Tube head front cover

1. Bend the rim outwards slightly to aid in removal (**1**).
2. Unscrew the four screws that attach the bottom cover to the C-arm (**2**).
3. Rotate the X-ray tube head so it is flush with the C-arm.

4. Bend the edges of the C-arm bottom cover out at the tube head end to release the catches (**3**), then remove the cover downwards starting from the X-ray tube end of the cover (**4**).

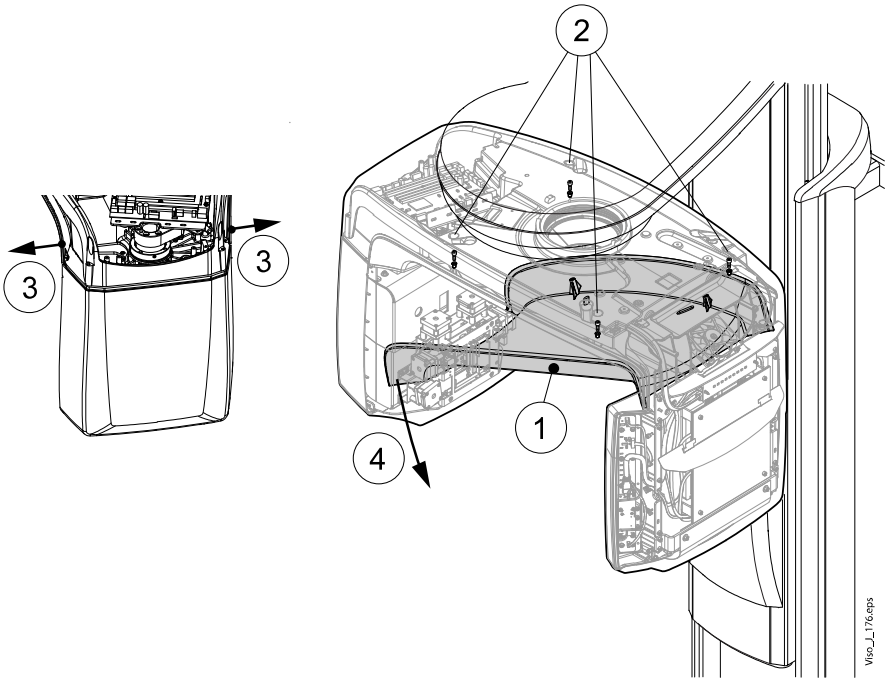

NOTE

Be careful not to harm the collimator.

6.1.3 Removing patient support covers

Removing patient support arm covers

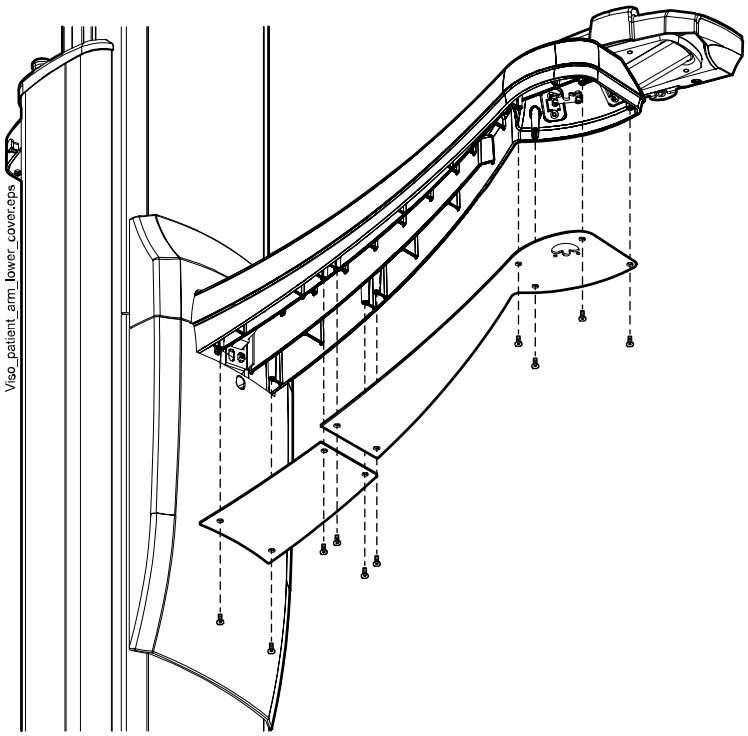

1. Remove the screws holding the two patient support arm bottom plates in place.
2. Lift the plates away.

Removing patient support base cover

1. Unscrew the cover attachment screws **(1)** and **(2)**.
2. Remove the cover **(3)**.

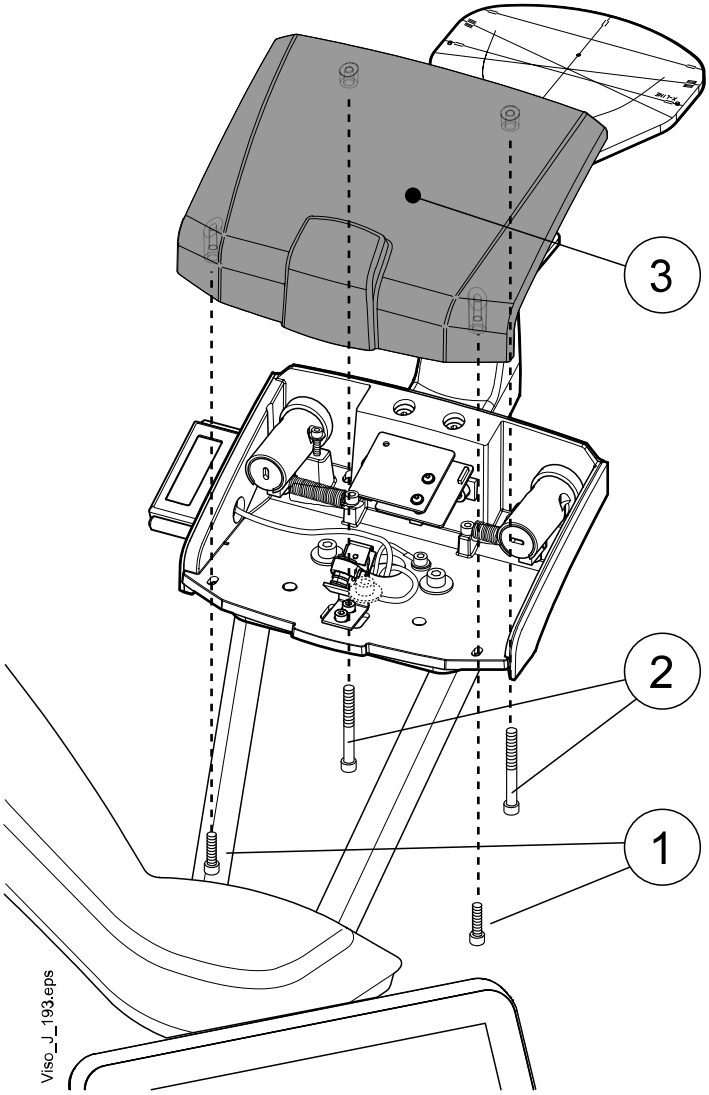

6.1.4 Removing column covers

Switch off the X-ray unit before removing the column covers.

Removing carriage lower cover

Remove the lower cover (**1**) as follows. Unscrew the screw holding the lower cover in place (**2**) and slide the cover downwards (**3**).

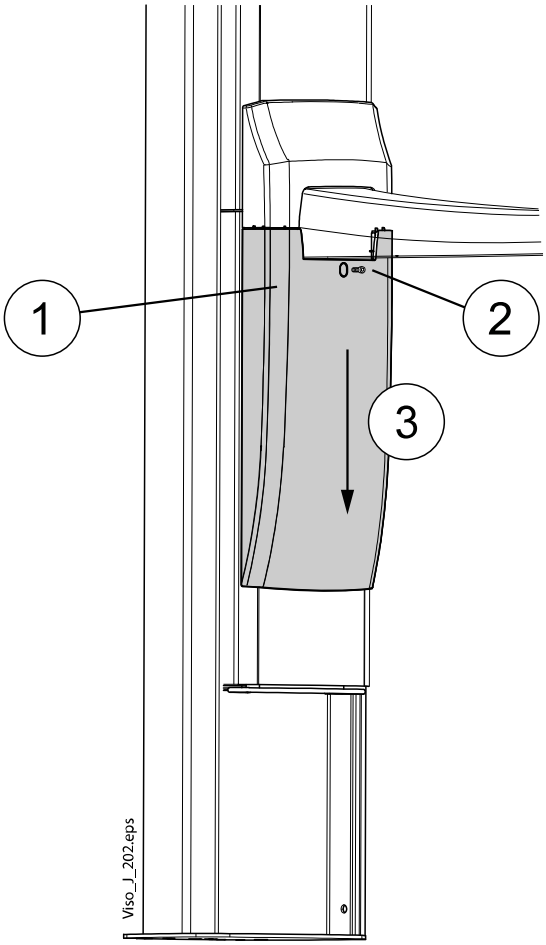

Removing carriage upper cover

Remove the upper cover (**1**) as follows. Remove the two screws holding the upper cover in place (**2**) and lift the cover upwards (**3**).

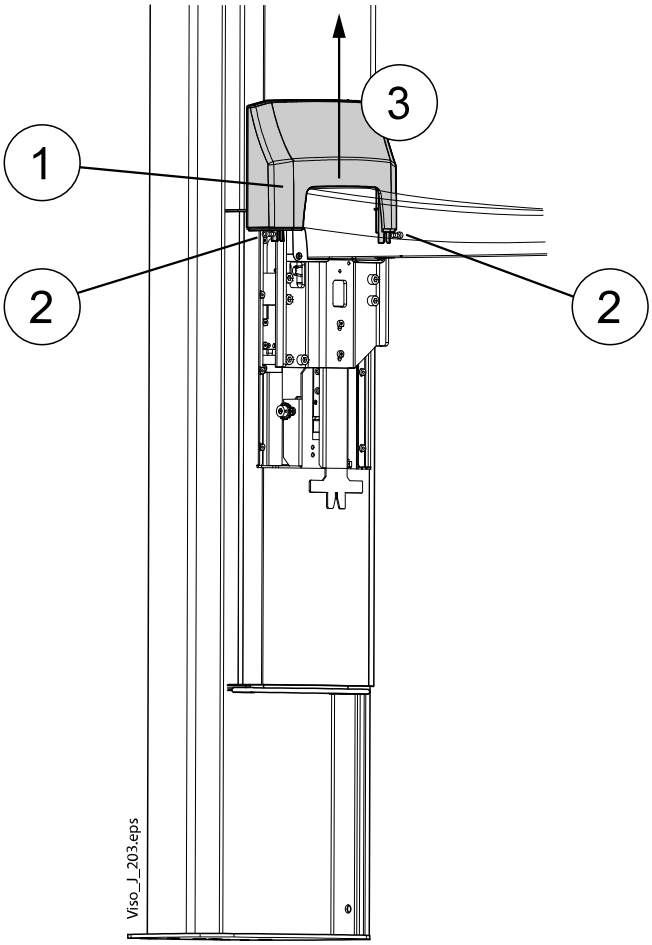

Removing column lower cover

Remove the column lower cover (**1**) as follows. Unscrew eight attachment screws (**2**) and loosen two screws (**3**) and remove the cover.

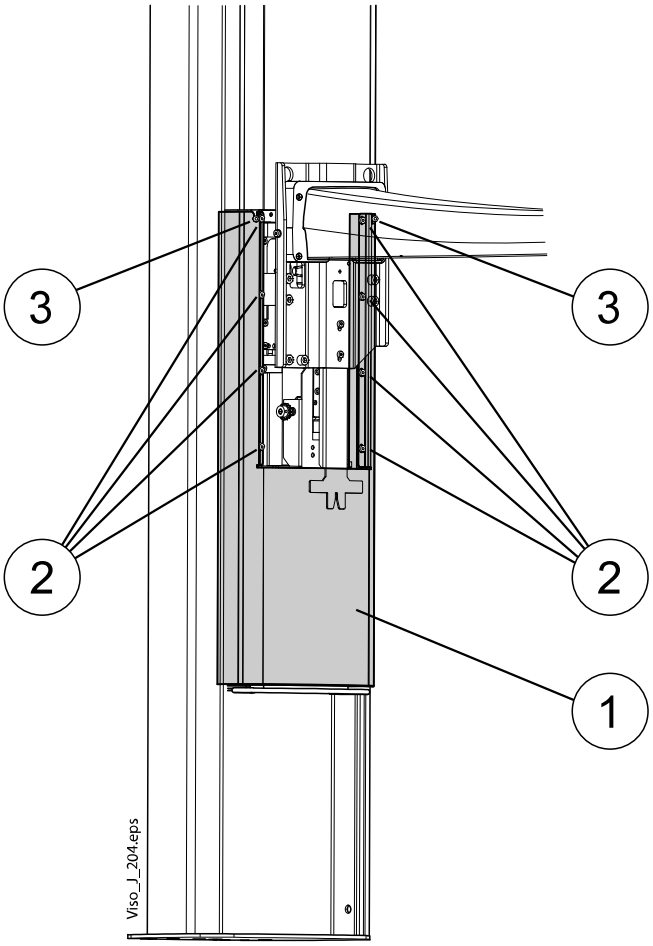

Removing column upper cover

Remove the carriage upper cover according to the instructions given earlier in this section.

If the patient support arm is too up, preventing to remove the moving column upper front panel, drivethe support arm down as described later in this section (1).

Remove two cover attachment washers (2) and nuts (3). Lift the cover from its position (4).

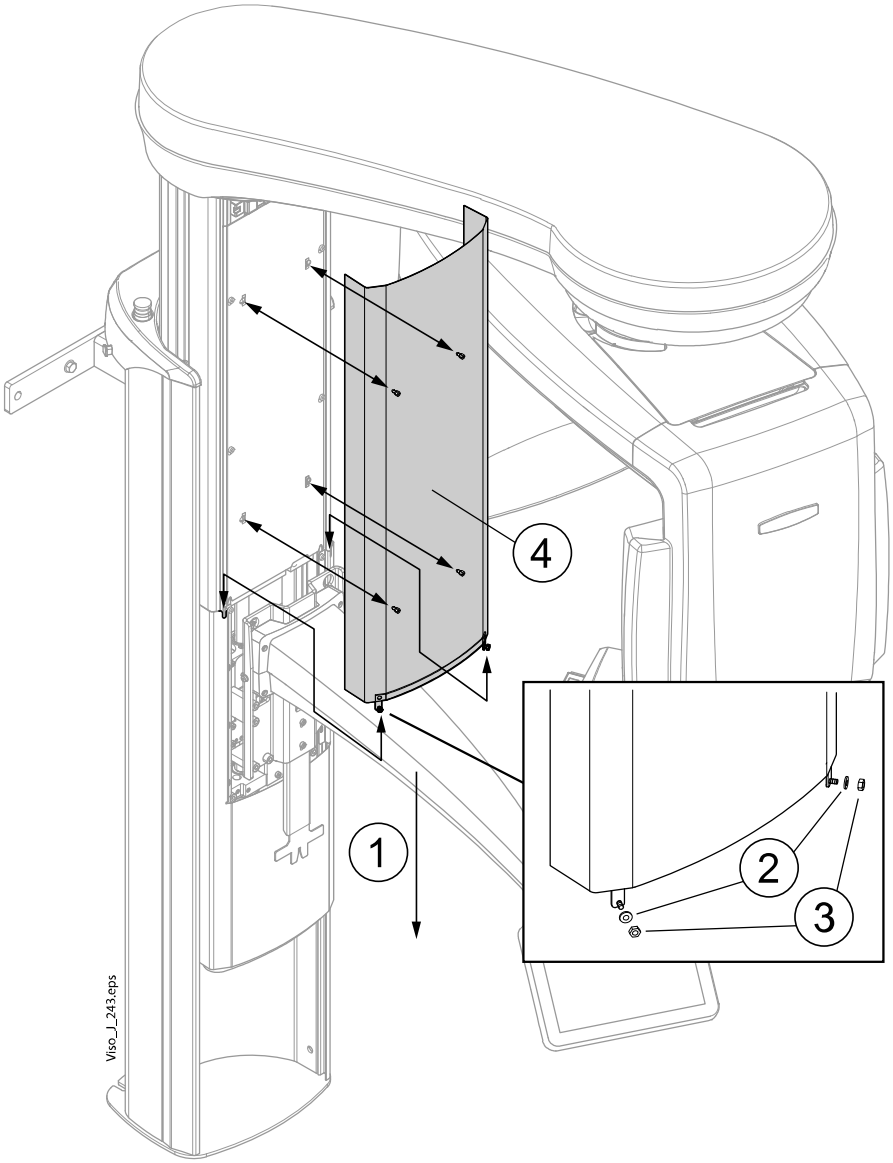

Driving the patient support arm down

If the patient support arm is too up, preventing to remove the moving column upper front panel, enter the Patient support lift calibration (3242).

Carefully drive the patient support arm down with the up and down buttons. DO NOT DRIVE the patient support TOO DOWN, but just enough to get the telescopic column upper front panel removed. **IMPORTANT:** After attaching the cover, exit the Patient support lift calibration mode by touching red cross button.

Switch off the X-ray unit and wait for two minutes before proceeding.

Removing EMC cover

Loosen the six screws of the EMC cover (1) and remove the EMC cover (2).

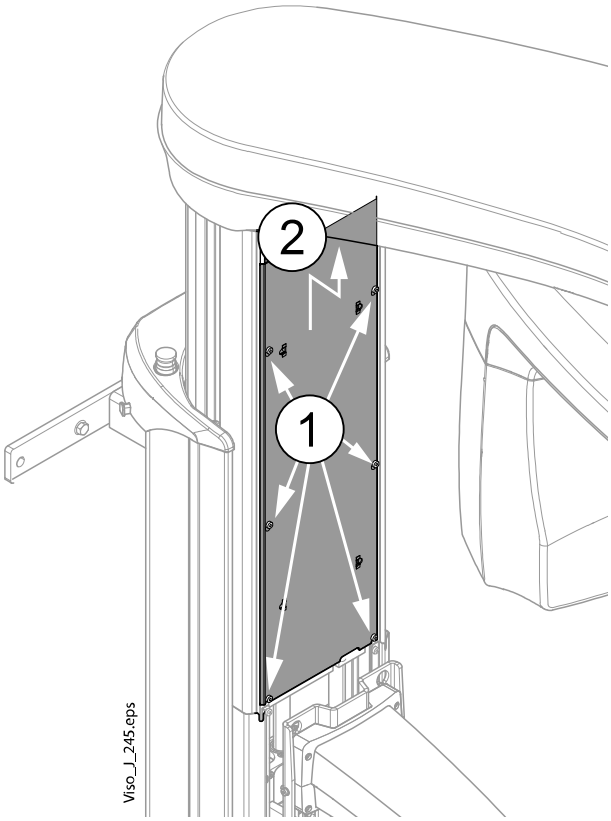

Removing column rear cover plates

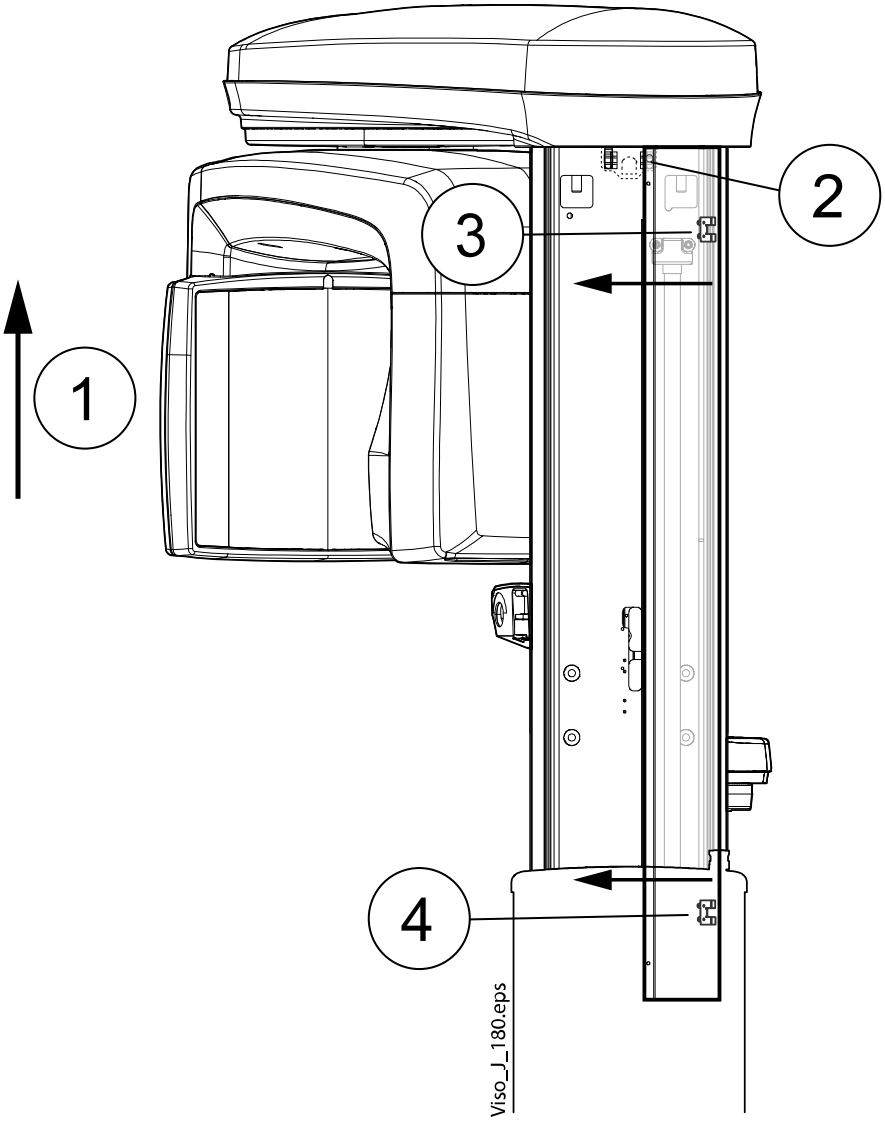

1. Switch the unit on and drive the moving column to the uppermost position (**1**).
2. Switch the unit off.
3. Detach the upper inner corner of the cover plate by carefully pulling it outwards (**2**).
4. Detach the cover plate by pushing the cover plate inwards (**3**, **4**, see the small arrows in the figure above).

6.2 Replacing PCBs

NOTE

When replacing the PCBs refer also to the wiring diagram, publication number D0011416.

6.2.1 Replacing moving column PCBs

WARNING

The X-ray unit contains live mains voltage parts. Switch off the power to the X-ray unit externally before replacing the column PCBs.

Preparations before replacement

1. Drive the column to a convenient height and switch off the X-ray unit.
2. Make sure the main switch and/or an external fuse are off.
3. Remove the moving column upper front cover and ECM cover, see section "Removing column covers" on page 131.
4. You can now replace the PCBs.

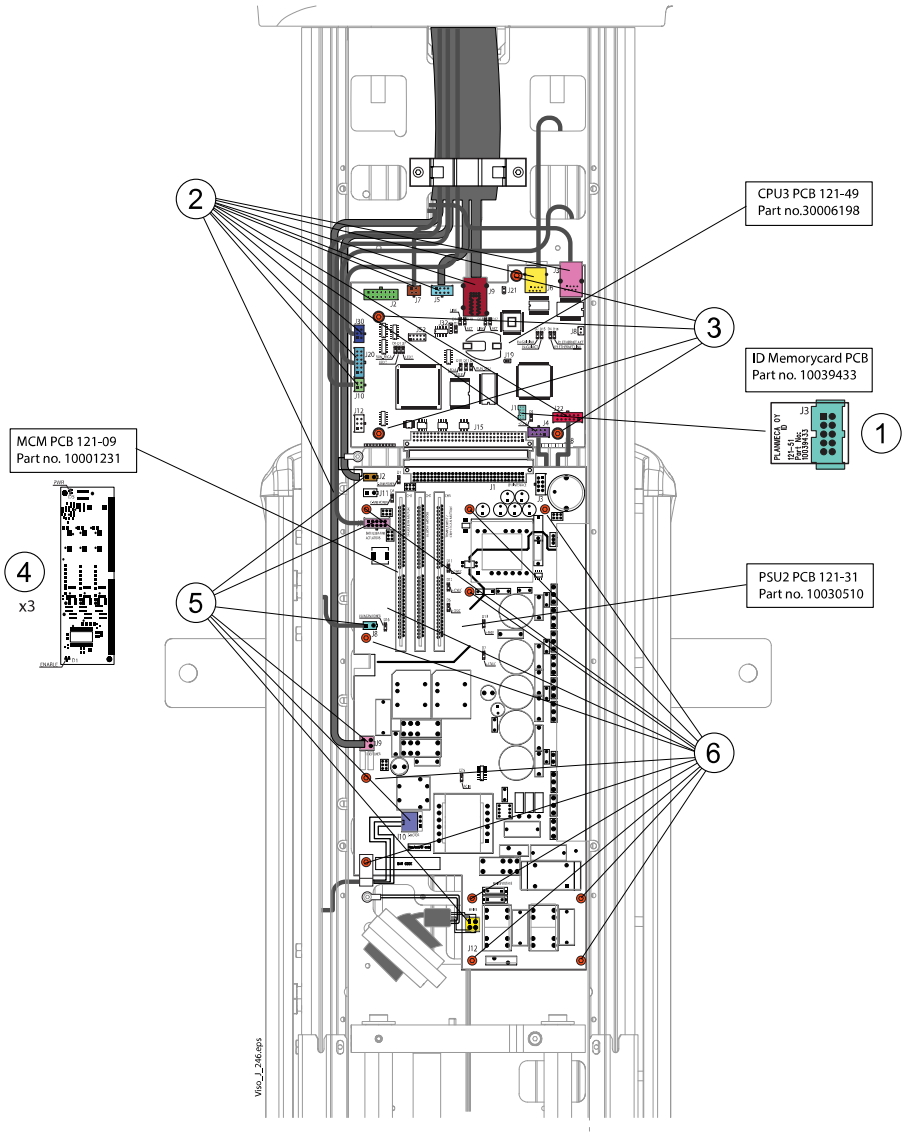

ID memorycard PCB

When replacing the CPU3 PCB detach the ID memorycard PCB **(1)** from the old CPU3 PCB and attach it to the new one.

CPU3 PCB

1. Disconnect all the cables that are connected to the CPU3 PCB **(2)**.
2. Unscrew the CPU3 PCB attachment screws **(3)** and detach it from the PSU2 PCB.
3. Remove the CPU3 PCB.
4. Install the new PCB in reverse order. All the cable connectors are labeled. Only connect the cable to the matching PCB connector.

MCM PCBs

Detach the MCM PCB **(4)** from the PSU2 PCB.

PSU2 PCB

Detaching old PSU2 PCB

1. Disconnect all the cables that are connected to the PSU2 PCB.

   NOTE

   All the cable connectors are labelled. Only connect the cable to the matching PCB connector.

2. Remove the MCM PCBs from the PSU2 PCB.
3. Unscrew the PSU2 PCB attachment screws with the 3 mm Allen key and detach the PSU2 PCB from the CPU PCB. Remove the PSU2 PCB.

Installing new PSU2 PCB

1. Loosen the CPU3 PCB attachment screws.
2. Connect the PSU2 PCB to the CPU PCB. Attach the PSU2 PCB to its position with the attachment screws but do NOT tighten the attachment screws yet .
3. Make sure that the metal clips are not between the heat sink and column, but they are located above and below the heat sink.
4. Make sure that the cables are not squeezed between the heat sink and column.
5. Before tightening the attachment screws push first the PSU2 PCB lower edge towards the right side of the column so that the heat sink touches the column. Tighten the lowest left attachment screw.
6. Then push the PSU2 PCB upper edge towards the right side of the column so that the heat sink touches the column. Tighten the uppermost middle attachment screw.
7. Firmly tighten the attachment screws of both the PSU2 PCB and the CPU3 PCB.
8. Connect all the cables to the PSU2 PCB. Secure the column motor cable to the new PCB. Attach the MCM PCBs to the PSU2 PCB.
9. Replace the removed parts.
10. Perform filament definition calibration.

6.2.2 Replacing input PCB

WARNING

The X-ray unit contains live mains voltage parts. Always unplug the unit from mains outlet before attempting to service the Input module.

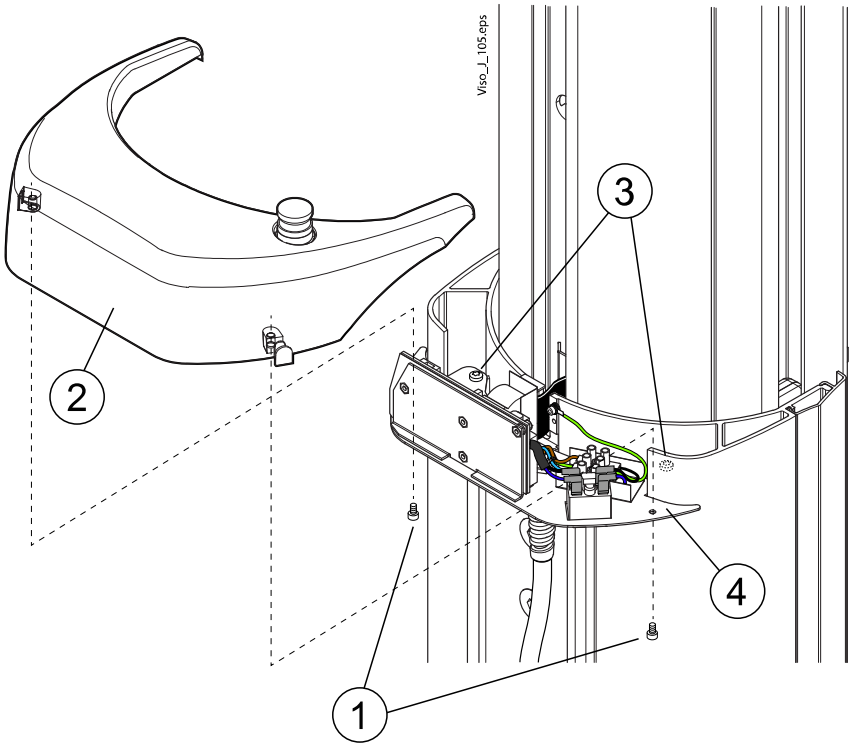

1. Detach all the cables (e.g. power supply cable and exposure switch cable) from their input module connectors.
2. Unscrew the two M4x16 DIN 7984 attachment screws of the column top cover with 3 mm Allen key (**1**) and remove the cover (**2**).
3. Unscrew the two M4.8x19 torx 7981 attachment screws of the input module (**3**) and detach the module (**4**).

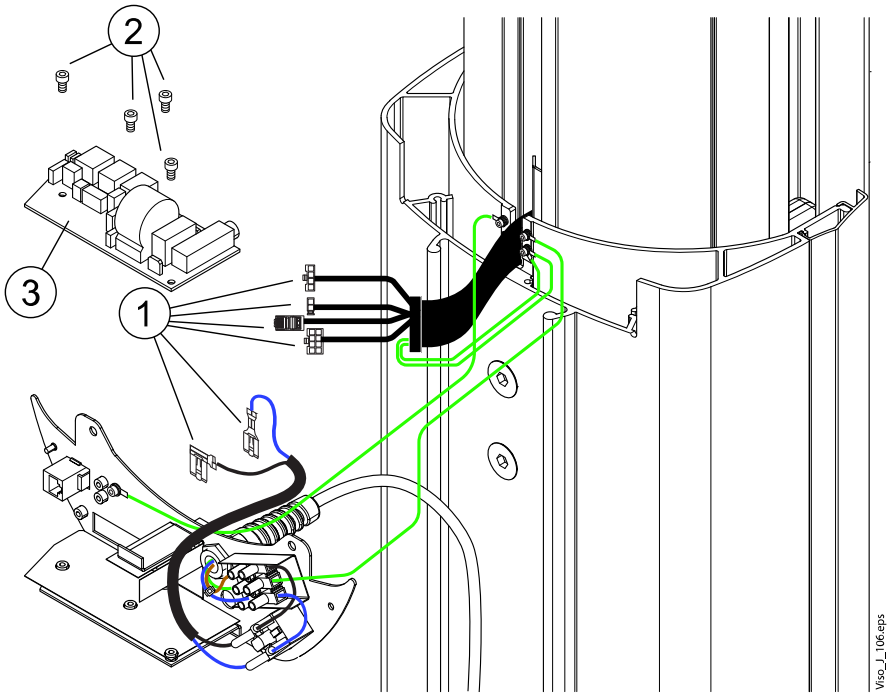

4. Disconnect all the cables that are connected to the Input PCB (**1**).

   The cables are marked and sized to correspond with their ports. Pay attention when reconnecting to ensure that the connections are correct.

5. Unscrew the four M4x16 DIN 912 screws with a 3mm Allen key from the Input PCB (**2**) and remove the PCB (**3**).

6. Install the new PCB in reverse order.

NOTE

Pay close attention to the cabling setup. For more information, see section "Input connections" on page 14.

The following figure shows the input PCB layout.

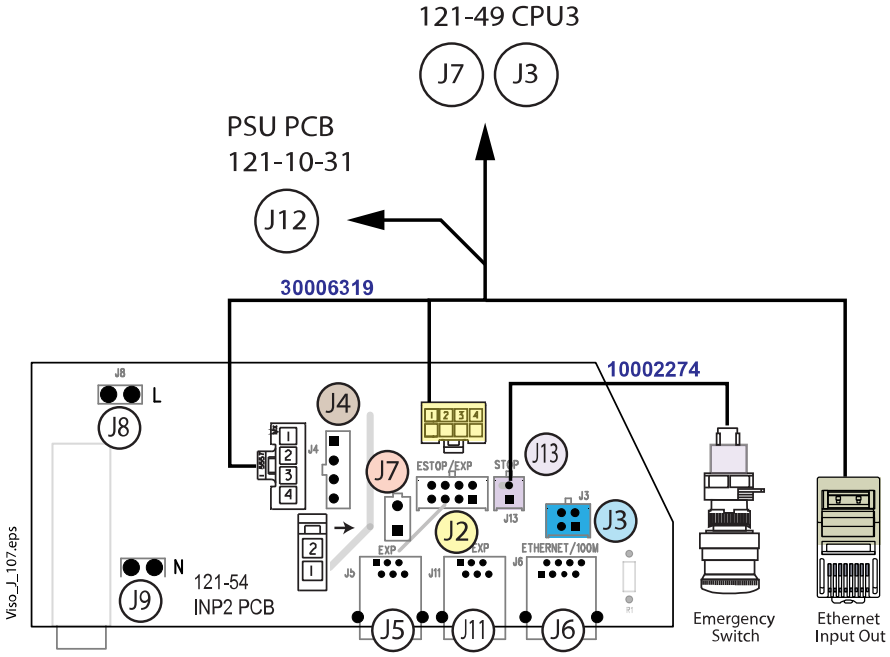

6.2.3 Replacing C-arm PCBs

CAM (C-arm module) PCB

1. Drive the column to a convenient height and switch off the X-ray unit.
2. Remove the C-arm upper covers. Refer to section "Removing C-arm covers" on page 124.
3. Remove the MCM PCBs from the CAM PCB.
4. Cut the cable ties that secure the cables connected to CAM PCB **(1)**. Disconnect all the cables that are connected to the CAM PCB **(2)**. Unscrew the PCB attachment screws with 2.5 mm Allen key **(3)** and remove the PCB **(4)**.

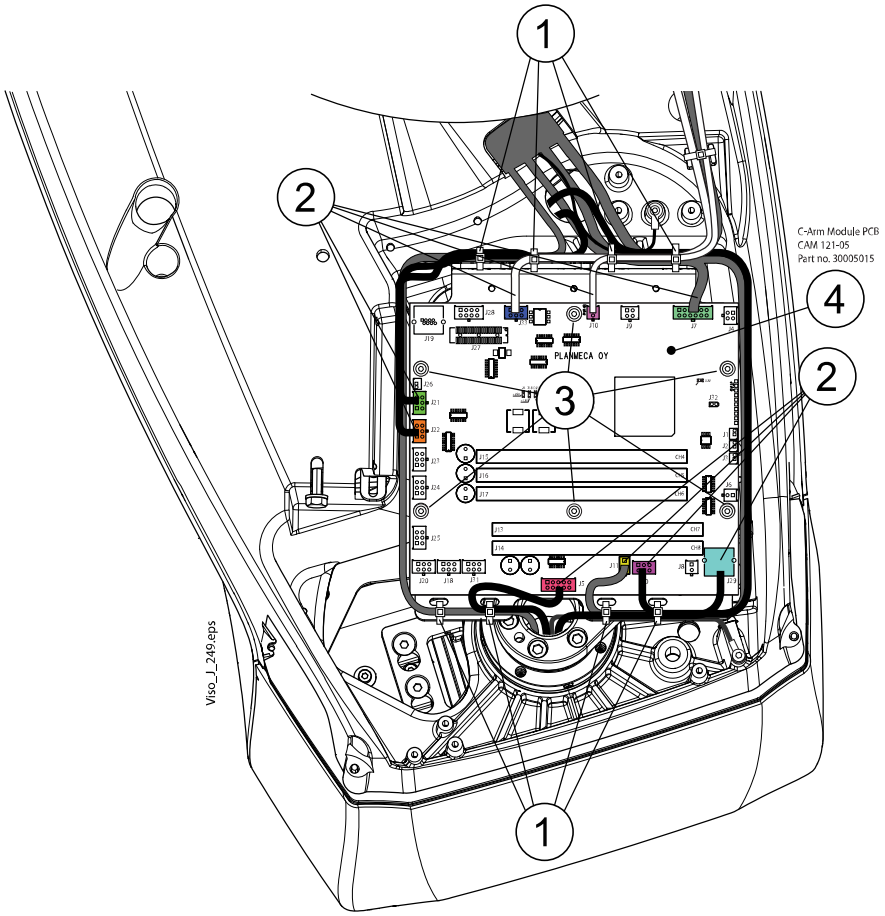

5. Install the new CAM PCB in reverse order. All the cable connectors are labeled. Only connect the cable to the matching PCB connector. Attach the MCM PCBs to the new CAM PCB.

CMCM (Collimator motor control module) PCB

1. Drive the column to a convenient height and switch off the X-ray unit.
2. Remove the tube assembly front cover. Refer to section "Removing C-arm covers" on page 124.
3. All the cable connectors are labeled. Only connect the cable to the matching PCB connector.

4. Disconnect all the cables that are connected to the CMCM PCB **(1)**. Unscrew the PCB attachment screws with 3 mm Allen key **(2)** and remove the PCB **(3)**.

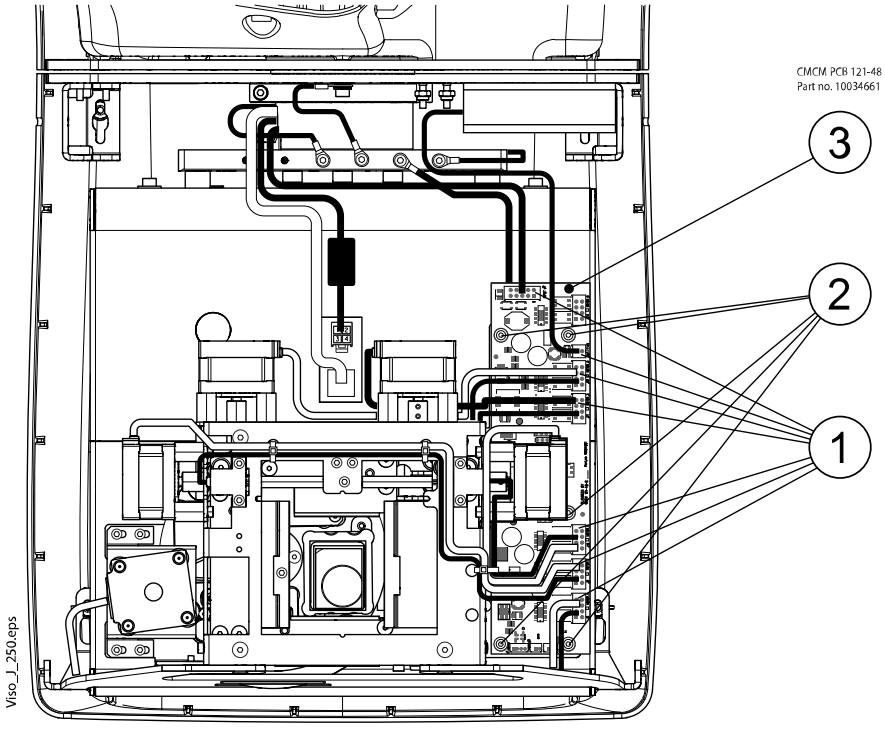

5. Install the new CMCM PCB in reverse order.

6.3 Replacing position sensors

Upper joint position sensor

1. Switch off the X-ray unit.
2. Remove the upper arm cover. Refer to section "Removing upper arm covers" on page 122.
3. Remove the moving column upper cover and EMC cover. Refer to section "Removing column covers" on page 131.

4. Cut the cable ties (1). Unscrew the position sensor assembly attachment screws (2 and 3).

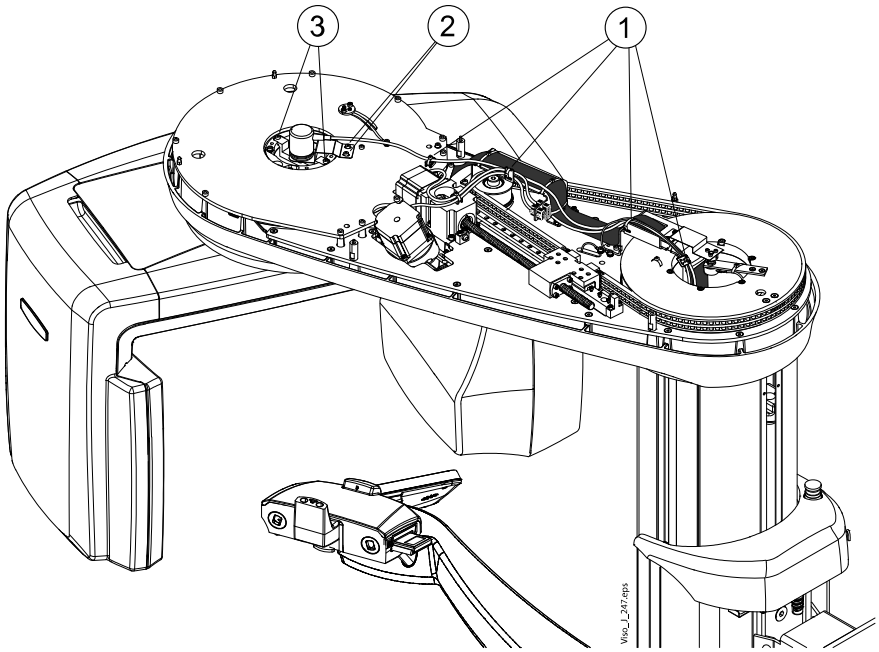

5. Unscrew two cable holder attachment screws (1) and remove the holder. Disconnect the position sensor cable from the CPU3 PCB (2).

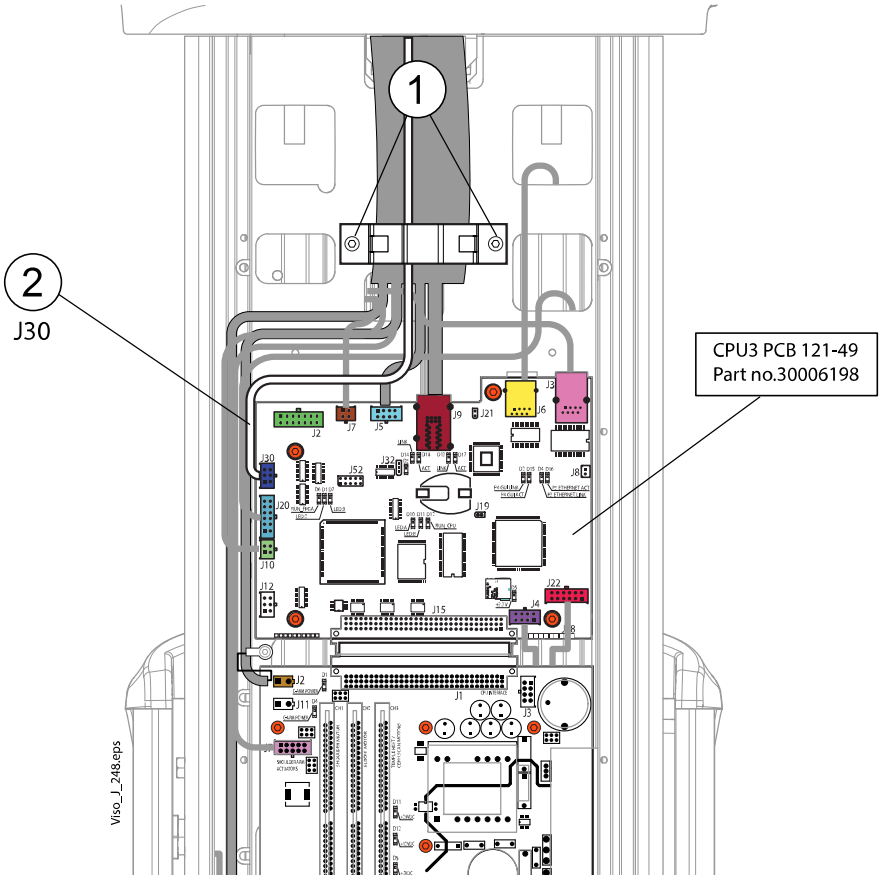

6. Route the position sensor cable out from the column and remove the position sensor from its position.
7. Attach the new position sensor in reverse order.

8. Perform the automatic position sensor calibration. Refer to section "Calibrating imaging arm position sensors" on page 107.

Column joint position sensor

1. Switch off the X-ray unit.
2. Remove the upper arm cover. Refer to section "Removing upper arm covers" on page 122.
3. Remove the moving column upper cover and EMC cover. Refer to section "Removing column covers" on page 131.
4. Loosen the attachment screw of position angle sensor coupling.

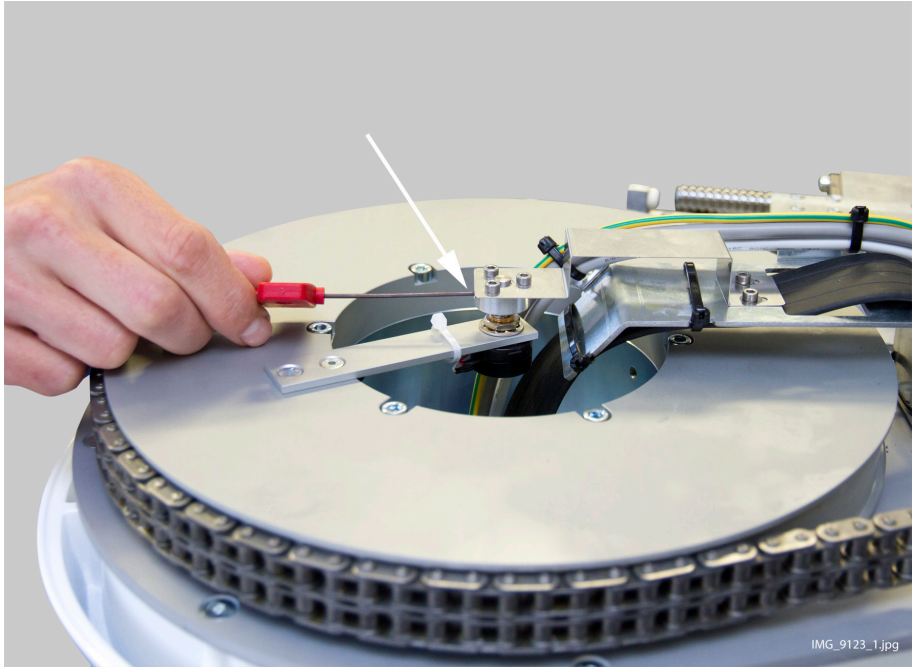

5. Unscrew two cable holder attachment screws and remove the holder. Disconnect the position sensor cable from the CPU3 PCB.
6. Unscrew two position sensor assembly attachment screws.

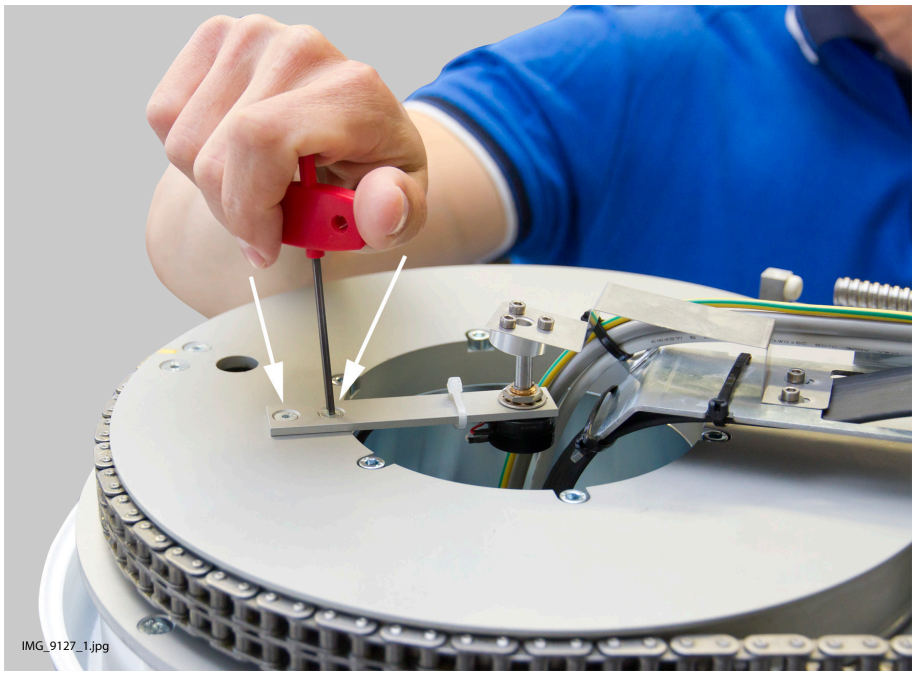

7. Remove the position sensor assembly.

8. Attach the new position sensor in reverse order.
9. Calibrate the position sensor. Refer to section "Adjusting column joint position sensor" on page 109.

6.4 Replacing battery on CPU3 PCB

WARNING

Always switch off the X-ray unit before replacing the battery.

CAUTION

Use protective eye-wear when changing the battery.

1. Switch off the unit from the mains switch.
2. Remove the column front cover and EMC cover as described in section "Removing column covers" on page 131.
3. Remove the old battery from its socket on the CPU3 PCB and place a new battery to the battery socket.

For more information on the approved battery type, see the battery details in section "Technical specifications" on page 16.

PLANMECA

Planmeca Oy | Asentajankatu 6 | 00880 Helsinki | Finland

tel. +358 20 7795 500 | fax +358 20 7795 555 | sales@planmeca.com | www.planmeca.com